SENZ®

GERMANY

COOKING IN STYLE

MULTIOVEN

COOKER HOOD

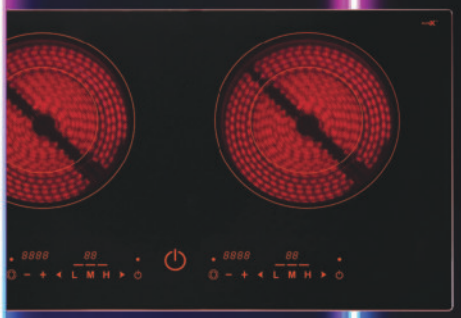

ELECTRIC HOB

SMART KITCHEN APPLIANCES

DESIGNED FOR THE NEXT GENERATION

GAS HOB

CHILLER

WATER HEATER

5.0

SENZ

Behind 1,500+ 5-Star Reviews is 17 Years of Listening

TOTAL REVIEW UP TO

1500+

SENZ GERMANY
COOKING IN STYLE

MALAYSIA'S NO 1 KITCHEN APPLIANCES BRAND WITH THE MOST 5 STARS GOOGLE REVIEWS

At **SENZ,** we believe a kitchen appliance is not just a piece of technology — it's a part of your everyday life.
From the very first satisfied customer to now over 1,500+ 5-Stars Google Reviews, we've never forgotten one simple truth:

- Listening to our customers is more important than just adding features
- Solving real kitchen problems matters more than flashy advertising

This trust wasn't built overnight.
It comes from our unwavering commitment to things that matter:
Every after-sales call we return within 3 hours:

- Every product designed for both young families and elderly users.
- Every detail — from our auto-clean cooker hoods, to intelSync technology, to anti-dry burning technology.
- Even taking the time to provide tutorials video to all our products for customer who need help learning how to use their appliances:

> "Their customer service was so patient — even my parents learned how to use it."

> "They have their own expert in-house technician — smooth and professional from start to finish."

> "Stylish, quiet, and hassle-free — absolutely no regrets."

These aren't our words.
They're the voices of over 1,500+ real customers who trusted us and spoke up.

Today, **SENZ** is more than just a kitchen appliance brand.
We're a smart kitchen appliances for the next generation — and the brand people feel confident recommending to their family and friends.

WE'LL NEVER STOP INNOVATING.
BUT MORE IMPORTANTLY, WE'LL NEVER STOP LISTENING TO YOU.
THAT IS — AND ALWAYS WILL BE — OUR CORE PROMISE.

CSR PROGRAM - SPONSOR OF THE APPLIANCES INITIATIVE

SENZ Aroma DAPUR SEKOLAH

AROMA DAPUR SEKOLAH

At SENZ, we believe in giving back to society and nurturing future generations. With great pride, we announce our contribution of premium kitchen appliances to schools in need through our CSR initiative — empowering young chefs to shape a brighter tomorrow.

SMK ALAM MEGAH

SMK PUCHONG PERDANA

SJK (C) TAMAN CONNAUGHT

SMK KAJANG UTAMA

PREMIUM X
Collection

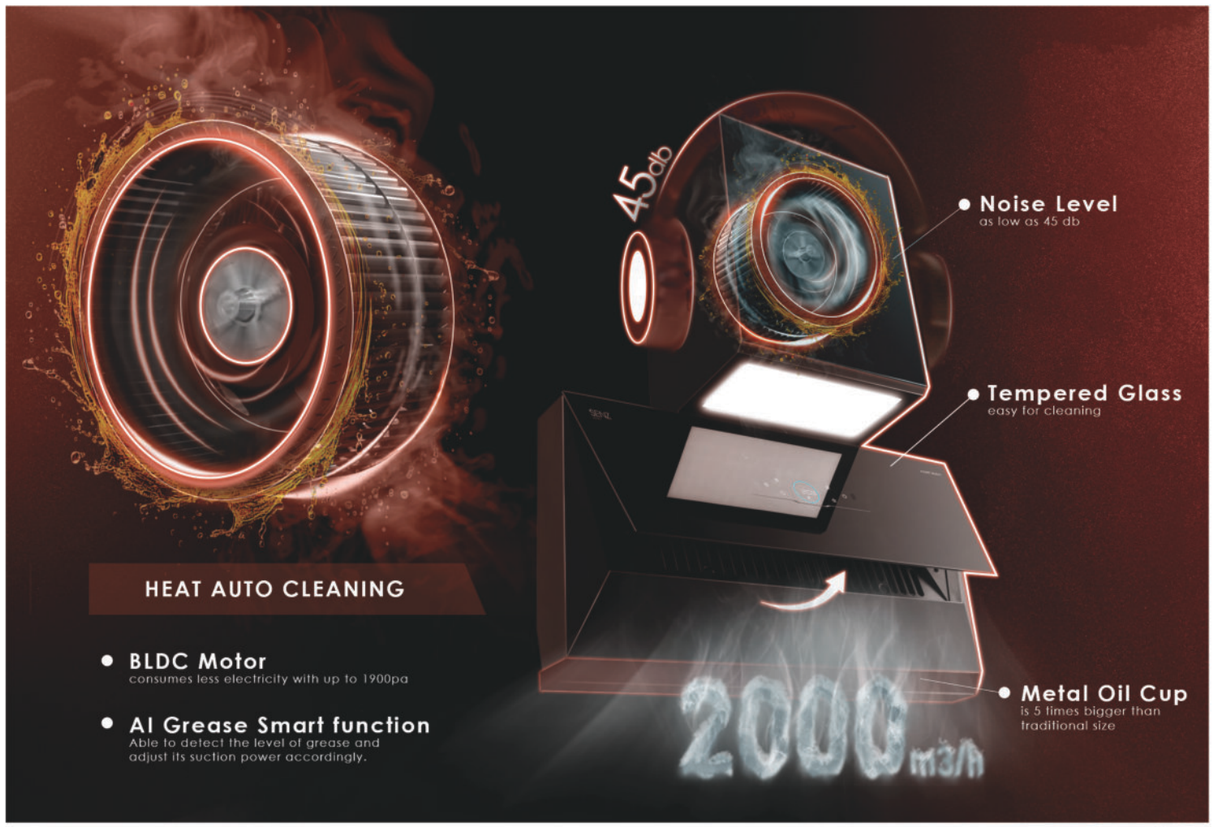

PREMIUM X NEW

ZAFFIRO DC Diamond Shape intelClean™ Cooker Hood

Retail Price: EM: RM4,199 WM: RM3,999

Model No: SZ- CH9980DC

Key Features

- AI Grease Smart Function
- 2000 m3/h Suction Power + Turbo Boost
- Motion Sensor Technology
- Ultra-Quiet Operation
- Heat Auto Cleaning Function
- Equip with intelSync Technology

Additional Practical Features

- BLDC Motor – with up to 1900Pa
- 5x Larger Metal Oil Cup
- LED lighting
- Removable Magnetic Metal Filter

Installation Accessories Included

- 1 pcs Washable Metal Filter
- 2 pcs Metal Chimney Cover
- Stainless Steel Wall Cap
- 3 meters Aluminum Hose (hose dimension: 180mm (7"))
- Ducting/Coring Size: 150mm = 6 inches (includes connector to adapt from 180mm to 150mm for easy installation)

Recommended Installation Height

- From bottom of hood to your counter top
  - Electric Hob : 300 - 450mm
  - Gas Hob : 400 - 500mm

Optional Accessories

- Charcoal Filter

Plug Used

13amp

Motion Sensor Technology
Removable Magnetic Metal Filter
AI Grease Smart Function
BLDC Motor with up to 1900Pa
Noise Level as low as 45dB
AI IntelSync Technology
Heat Auto Cleaning

Installation fees is NOT included for all the price stated above & price is subject to change without prior notice

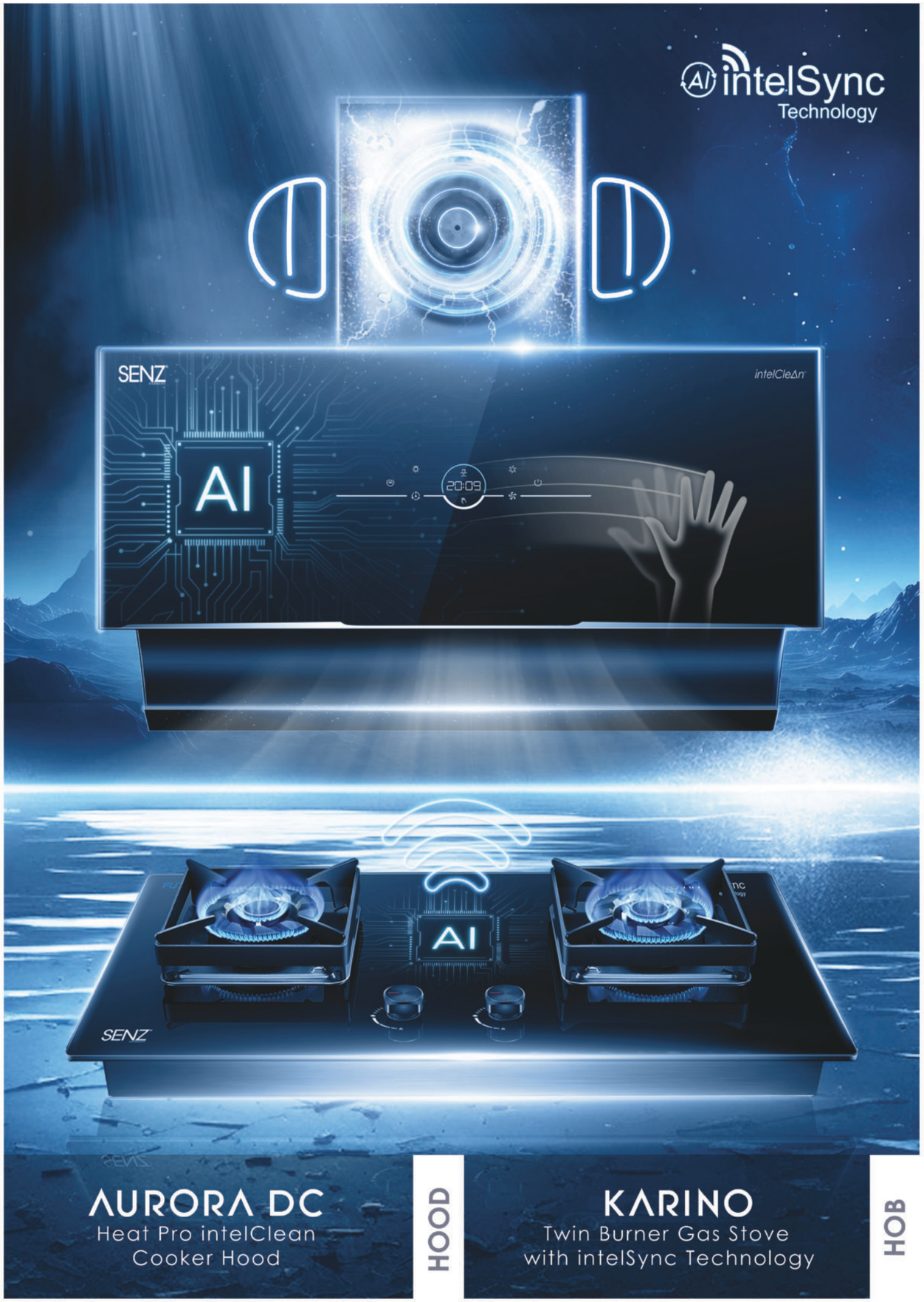

PREMIUM X NEW

AURORA DC Heat Pro intelClean™ Cooker Hood

Retail Price: EM: RM4,099 WM: RM3,899

Model No: SZ- CH9050AC(Auto Cleaning)

Key Features

- AI Grease Smart Function
- 2200 m3/h Suction Power + Turbo Boost
- Motion Sensor Technology
- Ultra-Quiet Operation
- Heat Auto Cleaning Function
- Equip with intelSync Technology

Additional Practical Features

- BLDC Motor – with up to 1900Pa
- 5x Larger Metal Oil Cup
- LED lighting
- Removable Metal Filter

Installation Accessories Included

- 1 pcs Washable Metal Filter
- 2 pcs Metal Chimney Cover
- Stainless Steel Wall Cap
- 3 meters Aluminum Hose (hose dimension: 180mm (7"))
- Ducting/Coring Size: 150mm = 6 inches (includes connector to adapt from 180mm to 150mm for easy installation)

Recommended Installation Height

- From bottom of hood to your counter top
  – For Electric Hob: 300mm ~ 450mm
  – For Gas Hob: 400mm ~ 500mm

Optional Accessories

- Charcoal Filter

Plug Used

13amp

PREMIUM X NEW

KARINO Twin Burner Gas Stove with intelSync Technology

Retail Price: EM: RM2,199 WM: RM1,999

Model No: SZ- GS3898

Key Features

- Equip with intelSync Technology
  (a) Smart AI ON / OFF Function
  (b) Smart AI Speed Adjustment
- Square Plate Base with Integrated Wok Rack
- 5.4kw/h Heat Intensity
- 0-Second Ignition
- Safety Valve
- 10 Seconds Auto Cut-Off
- Gloss Finished, Heat Resistance Ceramic Glass FUTEX

Additional Practical Features

- Battery Operated Auto-Ignition
- Exclusive SENZ Logo on Burner Cap
- Removable Burner Cap

Installation & Compatibility

- Gas Type – LPG
- Gas Pressure – 2800 kPA
- Installation Type – Free Standing or Built-In

CAUTION : Please ensure that the burner cap is placed securely and evenly to prevent any gas leaks and potential fire hazards.

Installation fees is NOT included for all the price stated above & price is subject to change without prior notice

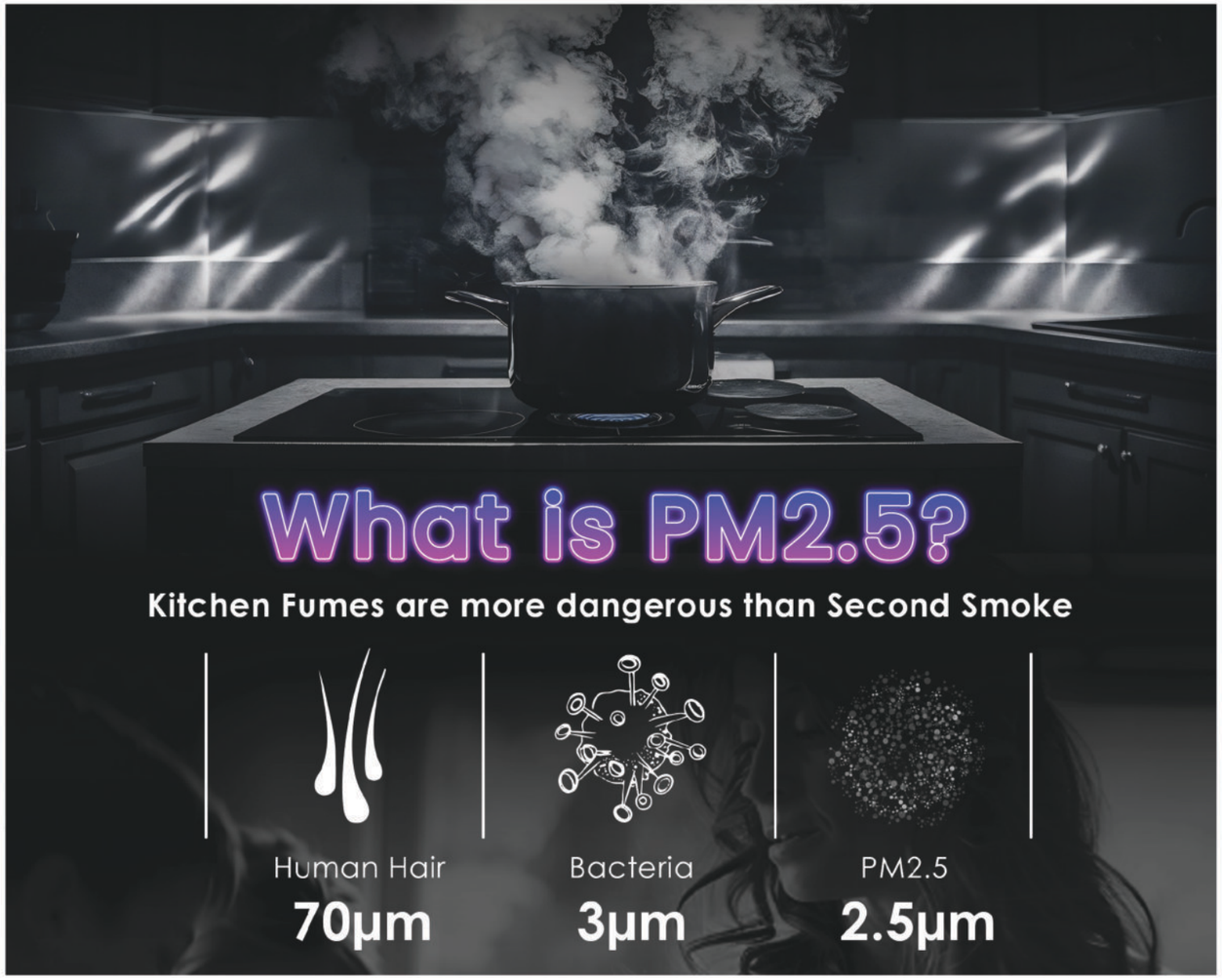

What is PM2.5?

Kitchen Fumes are more dangerous than Second Smoke

Human Hair	Bacteria	PM2.5
70µm	**3µm**	**2.5µm**

Where does PM2.5 in the kitchen come from

- Stir-Frying: carbon particles, organic compounds, dust
- Oil Breakdown during Frying: release PAHs(highly carcinogenic)
- Incomplete Gas Combustion: PM2.5 + carbon monoxide
- Forgetting to turn on the Hood: keeps pollutants trapped indoors

EFFECTS OF PM2.5 ON CHILDREN WITH SENSITIVE NOSES

Young children with allergic rhinitis are especially vulnerable to indoor air pollution

Sneezing & Nasal Itching	Nasal Congestion & Runny Nose	Red & Watery eyes

PREMIUMX NEW **CALLISTER** AIGuard Cooker Hood with Air Purifier Function **Retail Price: EM: RM4,099 WM: RM3,899**

Model No: SZ-CH9286DC

Key Features

- Angled Design with Black Glass Finish
- Smart AIGuard Technology
- Air Purifier (PM2.5) Function
- AI-Powered Efficiency
- AI Grease Smart Function
- 2400 m3/h Suction Power + Turbo Boost
- Motion Sensor Technology
- Ultra-Quiet Operation
- Heat Auto Cleaning Function

Additional Practical Features

- BLDC Motor – with up to 1550Pa
- 5x Larger Metal Oil Cup
- LED lighting
- Stylish Color Display Panel
- Retractable Glass Panel

Installation Accessories Included

- 1 pcs Washable Metal Filter
- 2 pcs Metal Chimney Cover
- Stainless Steel Wall Cap
- 3 meters Aluminum Hose (hose dimension: 180mm (7"))
- Ducting/Coring Size: 180mm = 7 inches

Recommended Installation Height

- From bottom of hood to your counter top
  - For Electric Hob: 300mm ~ 450mm
  - For Gas Hob: 400mm ~ 500mm
- ****Minimum hood width 1005mm (left to right) required to prevent blocking the AIGuard Sensor Point**

Plug Used

13amp

Motion Sensor Technology	AI Grease Smart Function	BLDC Motor with up to 1550Pa	Noise Level as low as 45dB	Smart AI Guard Technology	Air Purifier Automatically activate PM2.5	Heat Auto Cleaning

Installation fees is NOT included for all the price stated above & price is subject to change without prior notice

PREMIUMX NEW

ESSLA AIGuard Ultra Slim Cooker Hood with Air Purifier Function

Retail Price: EM: RM5,199 WM: RM4,999

Model No: SZ-CH9396DC

Key Features

- Angled Design with Grey Nano Coating Glass
- Ultra-Slim Design
- Smart AIGuard Technology
- Smart AIGuard Air Sensing
- AI-Powered Efficiency
- AI Grease Smart Function
- 2700 m3/h Suction Power + Turbo Boost
- Motion Sensor Technology
- Ultra-Quiet Operation
- Dual Auto Cleaning Function

Additional Practical Features

- BLDC Motor – with up to 2100Pa
- Hidden Oil Cup & Water Container
- LED lighting
- Stylish Color Display Panel

Installation Accessories Included

- 2 pcs Metal Chimney Cover
- Stainless Steel Wall Cap
- 3 meters Aluminum Hose (hose dimension: 190mm (7.5"))
- Ducting/Coring Size: 180mm = 7 inches (includes connector to adapt from 200mm to 150mm for easy installation)

Recommended Installation Height

- From bottom of hood to your counter top
  – For Electric Hob / Gas Hob: 300mm ~ 450mm

Plug Used

13amp

Motion Sensor Technology | **AI Grease** Smart Function | **BLDC Motor** With Up to 2100Pa | **Noise Level** as low as 45dB | **Smart AI Guard** Technology | **Heat + Steam** Auto Cleaning

PREMIUMX NEW

INOVA AIGuard Ultra Slim Cooker Hood with Air Purifier Function

Retail Price: EM: RM4,199 WM: RM3,999

Model No: SZ-CH9898DC

Key Features

- Angled Design with Grey Nano Coating Glass
- Ultra-Slim & Sleek Body Design
- Smart AIGuard Technology
- Smart AIGuard Air Sensing
- AI-Powered Efficiency
- AI Grease Smart Function
- 2700 m3/h Suction Power + Turbo Boost
- Motion Sensor Technology
- Ultra-Quiet Operation
- Heat Auto Cleaning Function

Additional Practical Features

- BLDC Motor – with up to 2100Pa
- 5x Larger Metal Oil Cup
- LED lighting
- Stylish Color Display Panel

Installation Accessories Included

- 2 pcs Metal Chimney Cover
- Stainless Steel Wall Cap
- Stainless Steel Wall Cap
- 3 meters Aluminum Hose (hose dimension: 190mm (7.5"))
- Ducting/Coring Size: 180mm = 7 inches (includes connector to adapt from 200mm to 150mm for easy installation)

Recommended Installation Height

- From bottom of hood to your counter top
  – For Electric Hob / Gas Hob: 400mm ~ 450mm

Plug Used

13amp

Motion Sensor Technology | **AI Grease** Smart Function | **BLDC Motor** With Up to 2100Pa | **Noise Level** as low as 45dB | **Smart AI Guard** Technology | **Heat Auto** Cleaning

Installation fees is NOT included for all the price stated above & price is subject to change without prior notice

PREMIUMX

CH938iAC Twin Turbo Motor intelClean™ Cooker Hood

Retail Price: EM: RM3,749 WM: RM3,549

Model No: SZ- CH938iAC

Key Features

- Latest Angled Design
- Twin Motor with Standalone Operation
- 2000 m3/h Suction Power
- Motion Sensor Technology
- Heat + Steam Auto Cleaning Function

Additional Practical Features

- 5x Larger Metal Oil Cup
- LED lighting
- Removable Aluminum Filter & Panel Glass

Installation Accessories Included

- 2pcs Washable Stainless Steel Filter
- 2 pcs Metal Chimney Cover
- Stainless Steel Wall Cap
- 3 meters Aluminum Hose (hose dimension: 180mm (7"))
- Ducting/Coring Size: 150mm = 6 inches (includes connector to adapt from 180mm to 150mm for easy installation)

Recommended Installation Height

- From bottom of hood to your counter top
  – For Electric Hob: 300mm ~ 450mm
  – For Gas Hob: 400mm ~ 500mm

Plug Used

13amp

Motion Sensor Technology | **Twin Motor** | Twin Motor with **Standalone Operation** | **Easy to Clean** Motor can be Clean Throughly | **Dual Auto Cleaning** (Heat and Steam)

PREMIUMX

ESTILLA GreaseGuard Heat Pro intelClean™ Cooker Hood

Retail Price: EM: RM3,949 WM: RM3,749

Model No: SZ- CH9090AC

Key Features

- Latest Angled Design
- Innovative TripleGuard Filters
- 1950 m3/h Suction Power + Turbo Boost
- Motion Sensor Technology
- Heat Auto Cleaning Function

Additional Practical Features

- 5x Larger Metal Oil Cup
- LED lighting
- Removable TripleGuard Filters

Installation Accessories Included

- 2 sets Washable TripleGuard Filters
- Chimney Cover
  – 1st Glass Chimney
  – 2nd Metal Chimney
- Stainless Steel Wall Cap
- 3 meters Aluminum Hose (hose dimension: 180mm (7"))
- Ducting/Coring Size: 150mm = 6 inches (includes connector to adapt from 180mm to 150mm for easy installation)

Recommended Installation Height

- From bottom of hood to your counter top
  – For Electric Hob: 300mm ~ 450mm
  – For Gas Hob: 400mm ~ 500mm

Optional Accessories

- Charcoal Filter

Plug Used

13amp

Motion Sensor Technology | **TripleGuard Filters** Up to 99%* of Grease | **Glass Chimney** Cover | **Heat Auto** Cleaning

Installation fees is NOT included for all the price stated above & price is subject to change without prior notice

PREMIUMX NEW **INFINITYZONE** Induction Cooker

Retail Price: **EM: RM3,799 WM: RM3,599**

Model No: SZ- DI798-M

Key Features

- Vertical Design
- Matte Finished, Heat Resistance Ceramic Glass
- InfinityZone Heating Design
  -Flexible induction cooking zone
- 4400W Power Output
- Sleek Touch Control with LED Display
- Pattern-Finished Glass
- 24 Hours Timer Function
- 120 Minutes Auto Cut-Off
- Electronic Overheating Protection

Additional Practical Features

- Auto Adjusts its Power Consumption Based on the Size of Your Cookware
- Child Safety Lock

Installation & Compatibility

- Power Supply – 220 – 240V ~ 50Hz
- Standby Electricity – 2W
- Installation Type – Free Standing or Built-In

Plug Used:

Direct Built-in wiring

Suitable for these cookware

Stainless Steel

Normal Steel

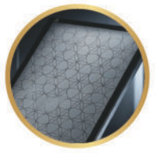

Pattern-Finished
Surface

Infinity Cooking Zone
Heat Technology

1st Infinity Zone
Induction Cooker in Malaysia

PREMIUMX NEW **INFINITYZONE** Induction Cooker

Retail Price: **EM: RM3,799 WM: RM3,599**

Model No: SZ- DI798-G

Key Features

- Vertical Design
- Gloss Finished, Heat Resistance Ceramic Glass
- InfinityZone Heating Design
  -Flexible induction cooking zone
- 4400W Power Output
- Sleek Touch Control with LED Display
- Gloss-Finished Glass
- 24 Hours Timer Function
- 120 Minutes Auto Cut-Off
- Electronic Overheating Protection

Additional Practical Features

- Auto Adjusts its Power Consumption Based on the Size of Your Cookware
- Child Safety Lock

Installation & Compatibility

- Power Supply – 220 – 240V ~ 50Hz
- Standby Electricity – 2W
- Installation Type – Free Standing or Built-In

Plug Used:

Direct Built-in wiring

Suitable for these cookware

Stainless Steel

Normal Steel

Infinity Cooking Zone
Heat Technology

1st Infinity Zone
Induction Cooker in Malaysia

Installation fees is NOT included for all the price stated above & price is subject to change without prior notice

PREMIUM X NEW — CRISTAL — Anti-Dry Burning Technology Twin Burner Gas Stove

Retail Price: EM: RM1,999 WM: RM1,799

Model No: SZ- GS6255

*The anti-drying technology is only available for left burner

Remarks: This model is equipped with anti-dry burning technology to enhance safety measures.It activates automatically when temperatures reach 290°C or higher to prevent overheating and potential accidents. Thus constant deep frying in high temperature might actives anti-drying technology as a safety measures that you may take into consideration. Due to the unique heat concentration properties of claypots, they may trigger this automatic turn off gas function. Therefore, we do not recommend using claypot and ceramic cookware on the burner that equipped with Anti-Drying Technology.

Key Features

- Anti-Dry Burning Technology
- 30% Wider Burner Distance
- 180 Minutes Timer Function
- 5.3kw/h Heat Intensity
- 0-Second Ignition
- Safety Valve
- 10 Seconds Auto Cut-Off
- NANO Coating, Heat Resistance Ceramic Glass FUTEX

Additional Practical Features

- Battery Operated Auto-Ignition
- Flexible Base Design
- Removable Burner Cap
- Special Windshield Wok Rack

Installation & Compatibility

- Gas Type – LPG
- Gas Pressure – 2800 kPA
- Installation Type – Free Standing or Built-In

CAUTION : Please ensure that the burner cap is placed securely and evenly to prevent any gas leaks and potential fire hazards.

PREMIUM X NEW — TRESOR — Anti-Dry Burning Technology Tri-Plate Burner Gas Stove

Retail Price: EM: RM2,199 WM: RM1,999

Model No: SZ- GS8355

*The anti-drying technology is only available for left burner

Remarks: This model is equipped with anti-dry burning technology to enhance safety measures.It activates automatically when temperatures reach 290°C or higher to prevent overheating and potential accidents. Thus constant deep frying in high temperature might actives anti-drying technology as a safety measures that you may take into consideration. Due to the unique heat concentration properties of claypots, they may trigger this automatic turn off gas function. Therefore, we do not recommend using claypot and ceramic cookware on the burner that equipped with Anti-Drying Technology.

Key Features

- 3 Plate Burner Gas Stove
- Anti-Dry Burning Technology
- 30% Wider Burner Distance
- 180 Minutes Timer Function
- 5.3kw/h Heat Intensity
- 0-Second Ignition
- Safety Valve
- 10 Seconds Auto Cut-Off
- NANO Coating, Heat Resistance Ceramic Glass FUTEX

Additional Practical Features

- Battery Operated Auto-Ignition
- Flexible Base Design
- Removable Burner Cap
- Special Windshield Wok Rack

Installation & Compatibility

- Gas Type – LPG
- Gas Pressure – 2800 kPA
- Installation Type – Free Standing or Built-In

CAUTION : Please ensure that the burner cap is placed securely and evenly to prevent any gas leaks and potential fire hazards.

Installation fees is NOT included for all the price stated above & price is subject to change without prior notice

PREMIUM X NEW — TRINITY — Twin Burner Gas Stove with intelSync Technology

Retail Price: EM: RM2,199 WM: RM1,999

Model No: SZ- GS9888

Key Features

- Equip with intelSync Technology
  - Smart AI ON / OFF Function
- Special Stainless Steel Frame
- 99 Minutes Timer Function
- 5.3kw/h Heat Intensity
- 0-Second Ignition
- Safety Valve
- 10 Seconds Auto Cut-Off
- Gloss Finished, Heat Resistance Ceramic Glass FUTEX

Additional Practical Features

- Battery Operated Auto-Ignition
- Exclusive SENZ Logo on Burner Cap
- Removable Burner Cap
- Sealed Burner Design

Installation & Compatibility

- Gas Type – LPG
- Gas Pressure – 2900 kPA
- Installation Type – Free Standing or Built-In

CAUTION : Please ensure that the burner cap is placed securely and evenly to prevent any gas leaks and potential fire hazards.

PREMIUM X — RI3600i — 2 in 1 Tri-Ringz Smart Cooker

Retail Price: EM: RM3,099 WM: RM2,899

Model No: SZ- RI3600i

Key Features

- Matte Finished, Heat Resistance Ceramic Glass FUTEX
- Dual Heating Zone
- Tri-Zones Ceramic Heating
- 4600W Power Output
- 13 Heat Levels Adjustment
- Sleek Touch Control with LED Display
- Matte-Finished Glass
- 24 Hours Timer Function
- 60 Minutes Auto Cut-Off
- Electronic Overheating Protection

Additional Practical Features

- Cooking Functions
- High Power Output
- Energy Efficient
- Child Safety Lock

Installation & Compatibility

- Glass Size – 750mm (W) x 420mm (L)
- Built-In Hole Dimension – 730mm (W) x 400mm (L)
- Power Supply – 220 – 240V ~ 50Hz
- Standby Electricity – 2W
- Installation Type – Free Standing or Built-In

Plug Used:

Direct Built-in wiring

Suit for all cookware materials

Installation fees is NOT included for all the price stated above & price is subject to change without prior notice

PREMIUMX NEW **CARTERRA** 3 plate 2 in 1 Smart Cooker **Retail Price: EM: RM3,999 WM: RM3,799**

Model No: SZ- RI8800i

Key Features

- Matte Finished, Heat Resistance Ceramic Glass FUTEX
- Triple Heating Zone
- 4000W Power Output - 3200W (Power Sharing - Left & Right) + 800W (Middle)
- Heating Element
- Wattage-Based Heat Adjustment
- Sleek Touch Control with LED Display
- Matte-Finished Glass
- 24 Hours Timer Function
- 60 Minutes Auto Cut-Off
- Electronic Overheating Protection

Additional Practical Features

- Cooking Functions
- High Power Output
- Energy Efficient
- Child Safety Lock

Installation & Compatibility

- Glass Size – 860mm (W) x 450mm (L)
- Built-In Hole Dimension – 840mm (W) x 435mm (L)
- Power Supply – 220 – 240V ~ 50Hz / 60Hz
- Standby Electricity – 2W
- Installation Type – Free Standing or Built-In

Plug Used:

Direct Built-in wiring

Suit for all cookware materials

Claypot, Ceramic, Glass, Stainless Steel, Normal Steel, Aluminium Non-stick, Copper, Cast Iron

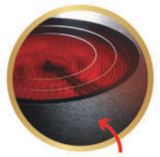

Matte-Finished Surface

PREMIUMX NEW **RC8200i** LED Button Double Ceramic Multicooker **Retail Price: EM: RM3,399 WM: RM3,199**

Model No: SZ- RC8200i

Key Features

- Gloss Finished, Heat Resistance Ceramic Glass FUTEX
- Dual Heating Zone
- 4400W Power Output
- Heating Element
- 12 Heat Levels Adjustment
- Sleek Invisible Touch Control with LED Display
- Gloss-Finished Glass
- 24 Hours Timer Function
- 60 Minutes Auto Cut-Off
- Electronic Overheating Protection

Additional Practical Features

- Special Rose Gold Frame
- Cooking Functions
- High Power Output
- Energy Efficient
- Child Safety Lock

Installation & Compatibility

- Glass Size – 765mm (W) x 435mm (L)
- Built-In Hole Dimension – 730mm (W) x 400mm (L)
- Power Supply : 220 – 240V ~ 50Hz / 60Hz
- Standby Electricity : 4W
- Installation Type – Free Standing or Built-In

Plug Used:

Direct Built-in wiring

Suit for all cookware materials

Claypot, Ceramic, Glass, Stainless Steel, Normal Steel, Aluminium Non-stick, Copper, Cast Iron

Special Rose Gold Frame Design

Invisible Button of Heat Adjustment

PREMIUMX **ALL-IN-ONE FLEXI STEAM PRO** intelClean™Oven **Retail Price: EM: RM6,199 WM: RM5,999**

Model No: SZ- SOV70108

Highlights:

- All in 1 Functions – Steam, Bake (8 baking modes), Air-Fry, Steam + Grill
- 70 Litres Capacity
- 108 Preset Auto Menu
- 24 Hours Digital Time Display

All in 1 functions

- Fermentation
- Disinfection Mode
- Keep Warm Function
- Steam Auto Cleaning Function
- Drying
- Defrost

Additional Practical Features

- Triple Glazed Removable Tempered Glass
- Removable Door
- Removable Inner Rack
- 1000ml Capacity External Water Container
- Child Safety Lock

Installation & Compatibility

- Voltage/Frequency – 230V/50Hz
- Power Consumption – 3000W
- Interior Material – Iron Coating Enamel
- Installation Type – Built-In

Accessories Included:

- Baking Tray x1
- Drip Tray x1
- Air Fry Basket x 1
- Inner Rack x2

Plug Used:

13amp

108 Auto Menu Function | **70L Capacity** | **External Water** Container | **Smart Auto** Cleaning | **Ferment** Dough | **Keep Warm** | **Disinfection** Mode

WM: RM5,099*
EM: RM5,299*
PWP

Remarks: There will be a variance of +20°C from the temperature set during operation.
*Purchase with purchase (PWP) is applicable with purchase of Multihood + Multicooker package only

PREMIUM X NEW **BC1008** Retro Multi-Functional Chiller

Retail Price: EM: RM2,899 WM: RM2,699

Model No: SZ- BC1008

Highlights:

- 4 Stylish Color
- 85 Litres Capacity
- Free Standing Design
- Temperature Range – 2°C~20°C
- Low-E Glass Door
- Electronic Touchpad Control
- LED Display Light

Additional Practical Features

- Retro Style Curve Handle
- Removable Shelf
- Child Safety Lock

Installation & Compatibility

- Power Consumption – 220V-240V~50Hz
- Operation Frequency – 60W
- Product Dimension
  – 480mm (W) x 440mm (L) x 880mm (H)
- Installation Type – Free Standing / Portable Only

Accessories Included

- Wire Flat Shelf x 4
- Adjustable Foot x4

Optional Accessories

- Wooden Rack

Plug Used:

13amp

CAUTION!

- **FROST OR WATER DROPLETS** may form inside the cooler during use, which is normal and won't affect its function.
- **AVOID LEANING ON OR PRESSING** the open door of the cooler to prevent it from tilting forward.
- **TO PREVENT** items from falling out when opening the door, avoid overfilling the cooler.
- It's normal for the sides of the cooler to become **WARM** due to refrigeration. Exercise caution.

LED Light

Low Emissivity Glass (Low-E)

Retro Style Curve Handle

Removable Shelf for Easy Cleaning

Installation fees is NOT included for all the price stated above & price is subject to change without prior notice

DIMENSION

SENZ ZAFFIRO DC(CH9980DC)

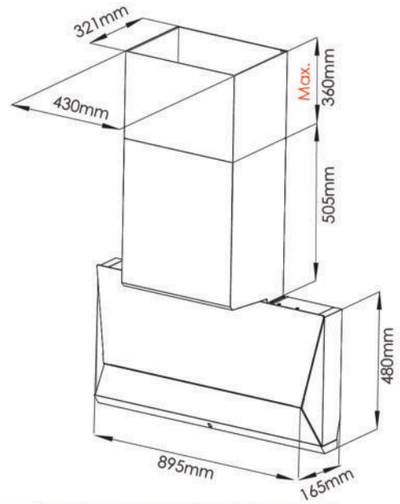

SENZ AURORA DC(CH9050DC)

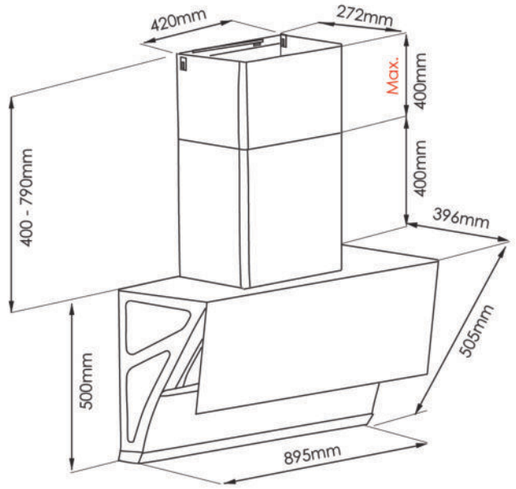

SENZ ESTILLA(CH9090AC)

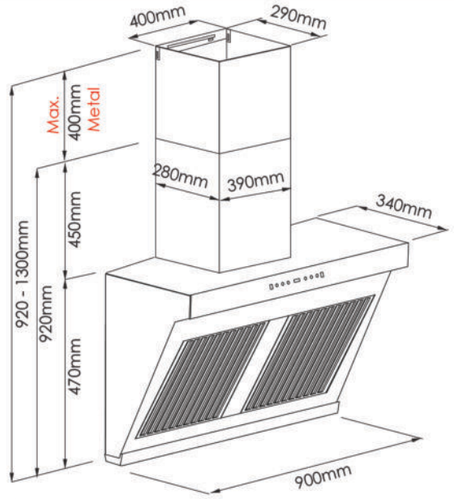

SENZ CH938iAC

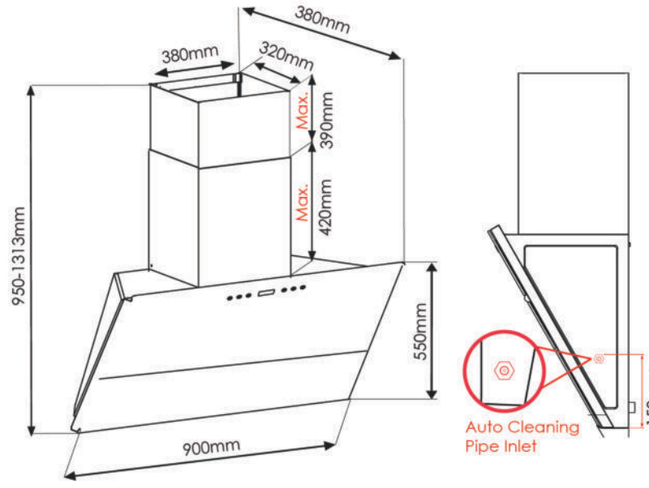

SENZ CALLISTER(CH9286DC)

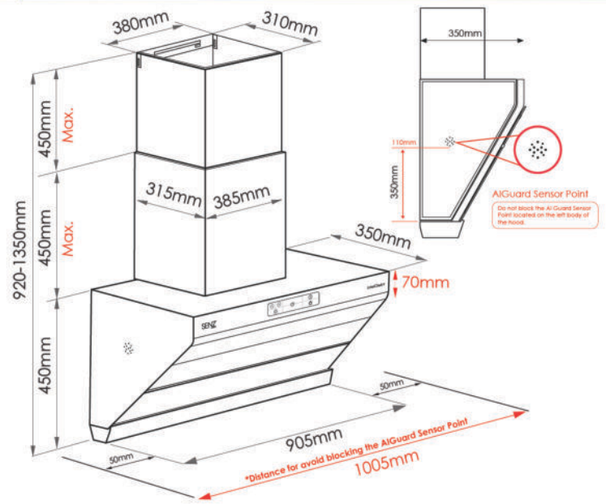

SENZ ESSLA(CH9396DC)

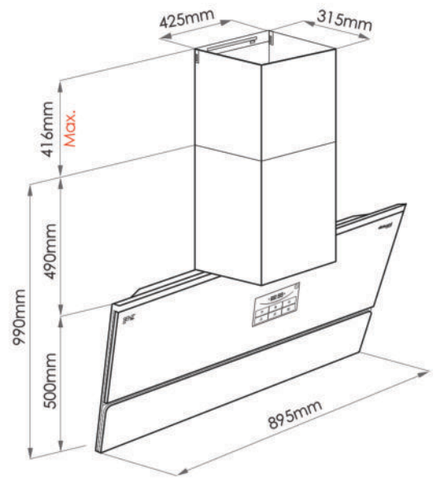

DIMENSION

SENZ INOVA(CH9898DC)

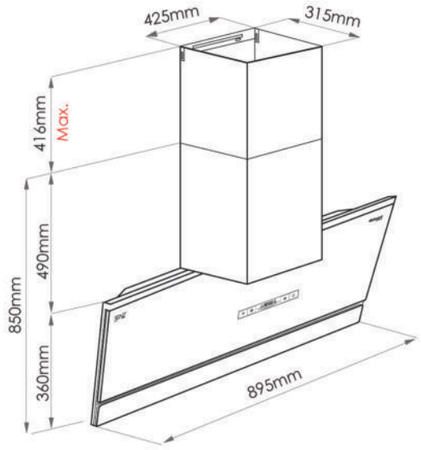

SENZ ALL-IN-ONE Flexi Steam Pro(SOV70108)

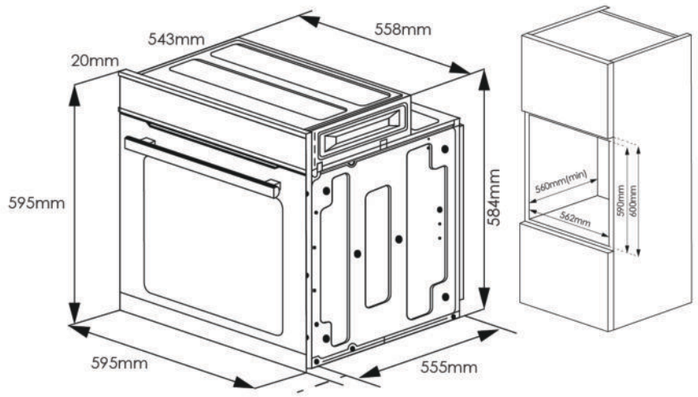

SENZ CARTERRA(RI8800i)

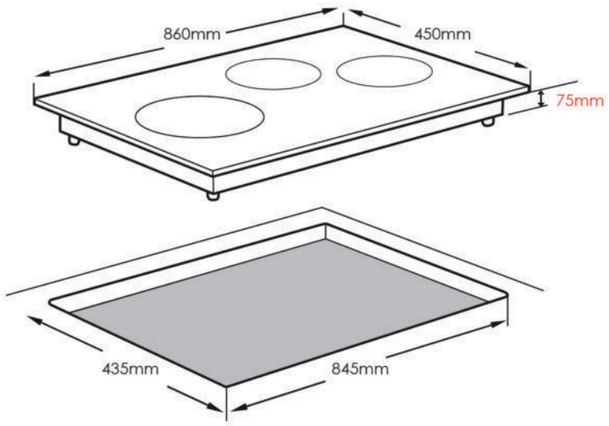

SENZ INFINITY ZONE(DI798)

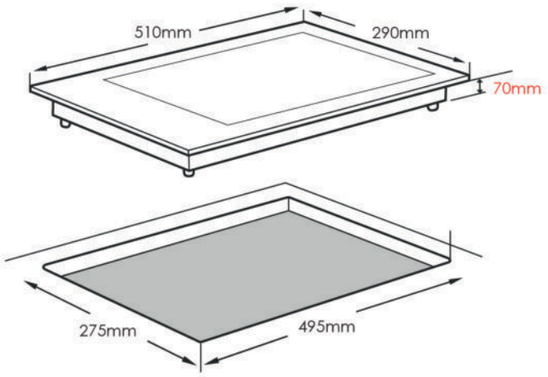

SENZ CRISTAL(GS6255) / TRESOR(GS8355)

For Existing Hole

Dimension

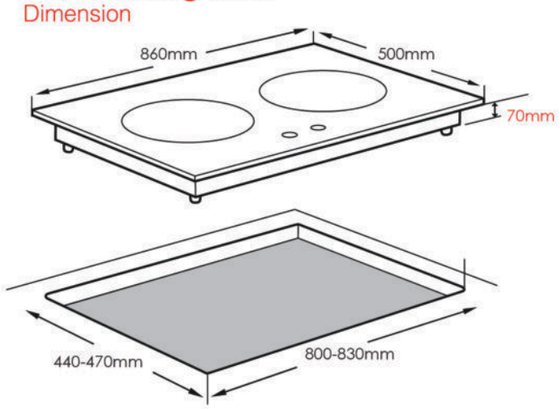

For New House

Dimension

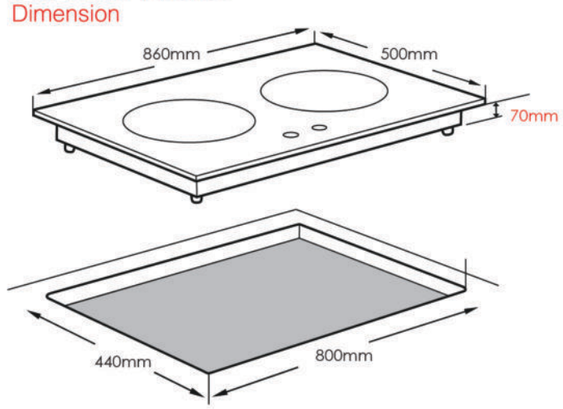

DIMENSION

SENZ KARINO(GS3898)

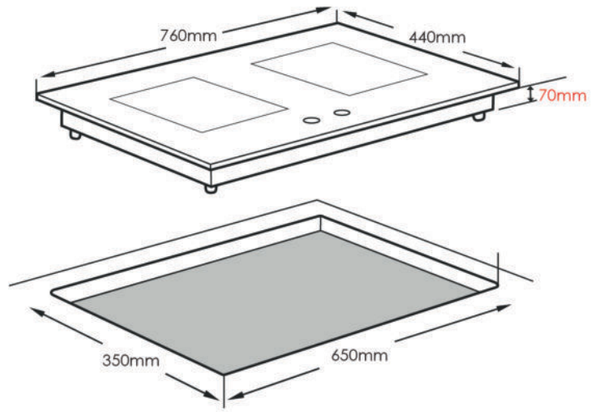

SENZ TRINITY(GS9888)

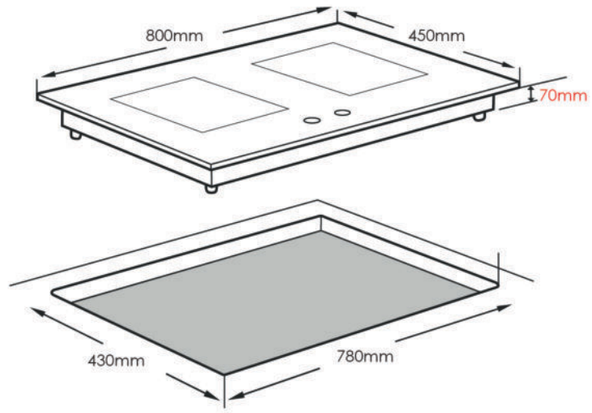

SENZ RI3600i

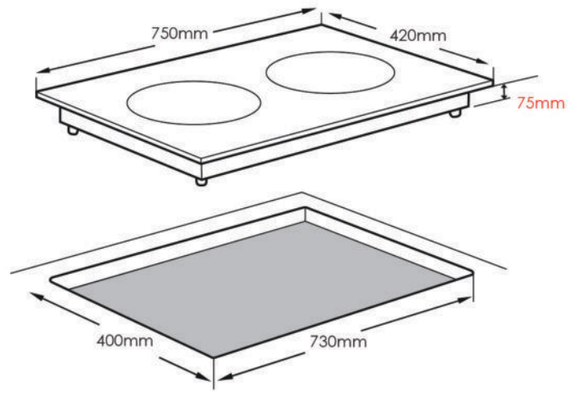

SENZ RC8200i

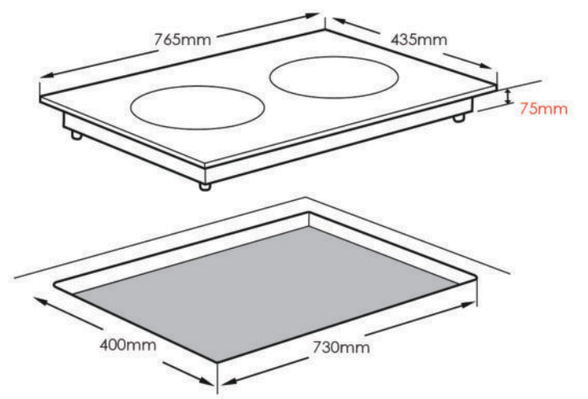

SENZ BC1008

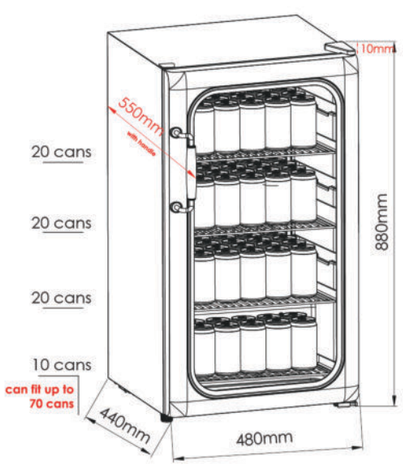

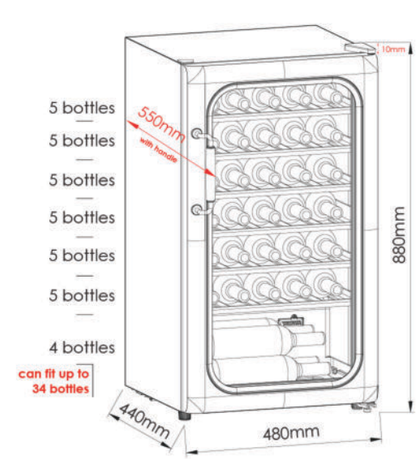

PREMIUM

Collection

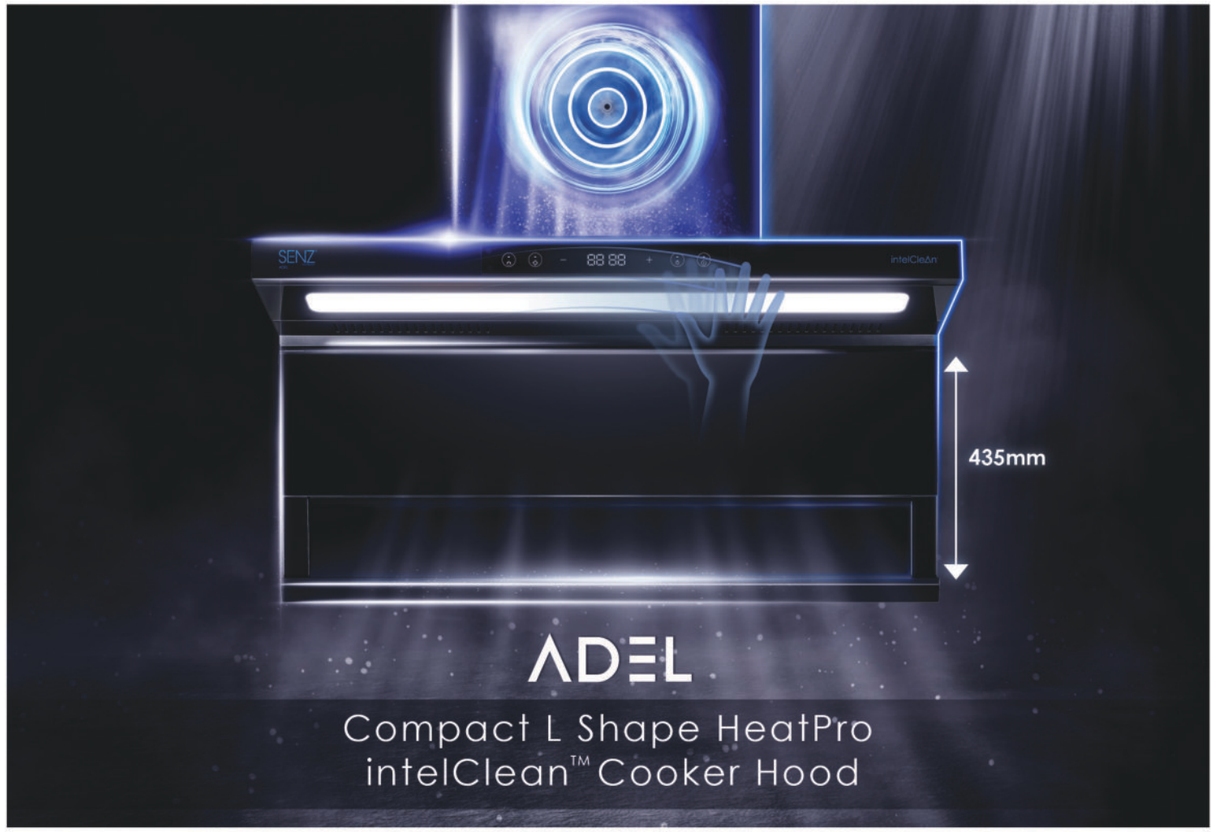

ADEL

Compact L Shape HeatPro
intelClean™ Cooker Hood

PREMIUM NEW **ADEL** Compact L Shape HeatPro intelClean™ Cooker Hood **Retail Price: EM: RM3,099 WM: RM2,999**

Model No: SZ- CH9560DC

Key Features
- Compact L-Shape Design
- 2000 m3/h Suction Power + Turbo Boost
- Motion Sensor Technology
- Ultra-Quiet Operation
- Heat Auto Cleaning Function
- AIShield Nano Cold Plate Glass

Additional Practical Features
- BLDC Motor – with up to 1400Pa
- 5x Larger Metal Oil Cup
- FULL LED lighting
- Inner Curved AIShield Nano Cold Plate Glass

Installation Accessories Included
- 2 pcs Metal Chimney Cover
- Stainless Steel Wall Cap
- 3 meters Aluminum Hose (hose dimension: 180mm (7"))
- Ducting/Coring Size: 150mm = 6 inches (includes connector to adapt from 180mm to 150mm for easy installation)

Recommended Installation Height
- From bottom of hood to your counter top
  – For Electric Hob: 300mm ~ 450mm
  – For Gas Hob: 400mm ~ 500mm

Optional Accessories
- Charcoal Filter

Plug Used
13amp

Motion Sensor Technology

AIShield Nano Cold Plate Glass

Full LED Panel

Heat Auto Cleaning

BLDC Motor with up to 1400Pa

Noise Level as low as 45dB

Installation fees is NOT included for all the price stated above & price is subject to change without prior notice

VISTA

Slim L Shape Design Heat Pro
intelClean™ Cooker Hood

PREMIUM NEW **VISTA** Slim L Shape Design Heat Pro intelClean™ Cooker Hood **Retail Price: EM: RM3,299 WM: RM3,099**

Model No: SZ- CH9670DC

Key Features
- AI Grease Smart Function
- 2000 m3/h Suction Power + Turbo Boost
- Motion Sensor Technology
- Ultra-Quiet Operation
- Heat Auto Cleaning Function
- Cold Plate Glass

Additional Practical Features
- BLDC Motor – with up to 2000Pa
- 5x Larger Metal Oil Cup
- LED lighting
- Sleek L-Shape Design
- Rose Gold Suction Frame

Installation Accessories Included
- Chimney Cover
  – 1st Glass Chimney
  – 2nd Metal Chimney
- Stainless Steel Wall Cap
- 3 meters Aluminum Hose (hose dimension: 180mm (7"))
- Ducting/Coring Size: 150mm = 6 inches (includes connector to adapt from 180mm to 150mm for easy installation)

Recommended Installation Height
- From bottom of hood to your counter top
  – For Electric Hob: 300mm ~ 450mm
  – For Gas Hob: 400mm ~ 500mm

Optional Accessories
- Charcoal Filter

Plug Used
13amp

Motion Sensor Technology

Cold Plate Glass (Easy Cleaning)

AI Grease Smart Function

BLDC Motor with up to 2000Pa

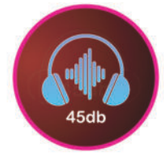

Noise Level as low as 45dB

Heat Auto Cleaning

Installation fees is NOT included for all the price stated above & price is subject to change without prior notice

PREMIUM NEW

STELLA DC L Shape Design Heat Pro intelClean™ Cooker Hood

Retail Price: EM: RM2,699 WM: RM2,499

Model No: SZ- CH9166DC

Key Features

- AI Grease Smart Function
- 2000 m3/h Suction Power + Turbo Boost
- Motion Sensor Technology
- Ultra-Quiet Operation
- Heat Auto Cleaning Function
- Cold Plate Glass

Additional Practical Features

- BLDC Motor – with up to 1900Pa
- 5x Larger Metal Oil Cup
- FULL LED lighting

Installation Accessories Included

- 2 pcs Metal Chimney Cover
- Stainless Steel Wall Cap
- 3 meters Aluminum Hose (hose dimension: 180mm (7"))
- Ducting/Coring Size: 150mm = 6 inches (includes connector to adapt from 180mm to 150mm for easy installation)

Recommended Installation Height

- From bottom of hood to your counter top
  – For Electric Hob: 300mm ~ 450mm
  – For Gas Hob: 400mm ~ 500mm

Optional Accessories

- Charcoal Filter

Plug Used

13amp

Motion Sensor Technology | **Cold Plate Glass** (Easy Cleaning) | **AI Grease** Smart Function | **BLDC Motor** with up to 1900Pa | **Noise Level** as low as 45dB | **Heat Auto** Cleaning

PREMIUM NEW

NOVA Compact HeatPro intelClean Cooker Hood

Retail Price: EM: RM2,899 WM: RM2,699

Model No: SZ-CH2898DC

Key Features

- Latest Hybrid (Chimney + Angled) Design
- 2000 m3/h Suction Power
- Motion Sensor Technology
- Ultra-Quiet Operation
- Heat Auto Cleaning Function

Additional Practical Features

- BLDC Motor – with up to 1800Pa
- 5x Larger Metal Oil Cup
- LED lighting
- Retractable Panel Design
- Removable Magnetic Metal Filter

Installation Accessories Included

- 1 pcs Washable Metal Filter
- Chimney Cover
  – 1st Glass Chimney
  – 2nd Metal Chimney
- Stainless Steel Wall Cap
- 3 meters Aluminum Hose (hose dimension: 180mm (7"))
- Ducting/Coring Size: 150mm = 6 inches (includes connector to adapt from 180mm to 150mm for easy installation)

Recommended Installation Height

- From bottom of hood to your counter top
  – For Electric Hob / Gas Hob: 600mm ~ 700mm

Optional Accessories

- Charcoal Filter

Plug Used

13amp

Motion Sensor Technology | **Removable Magnetic Metal Filter** | **Retractable Panel** | **Full LED** Panel | **BLDC Motor** with up to 1800Pa | **Noise Level** as Low as 45dB | **Heat Auto** Cleaning

Installation fees is NOT included for all the price stated above & price is subject to change without prior notice

PREMIUM NEW

RI6200i 2 in 1 Smart Cooker with Rose Gold Frame

Retail Price: EM: RM2,199 WM: RM1,999

Model No: SZ- RI6200i

Key Features

- Matte-Finished, Heat resistance ceramic glass FUTEX
- Dual Heating Zone – Induction (Left) + Ceramic (Right)
- 4000W Power Output
- 200W Boost Function
- P1-P9 Heat Power Level Adjustment
- Sleek Touch & Slider Control with LED Display
- 99 Minutes Timer Function
- 60 Minutes Auto Cut-Off
- Electronic Overheating Protection

Additional Practical Features

- Special Rose Gold Frame
- Cooking Functions
- High Power Output
- Energy Efficient
- Child Safety Lock

Installation & Compatibility

- Glass Size – 730mm (W) x 430mm (L)
- Built-In Hole Dimension – 670mm (W) x 400mm (L)
- Power Supply – 220 – 240V ~ 50Hz / 60Hz
- Standby Electricity – 2W
- Installation Type – Free Standing or Built-In

Plug Used:

Direct Built-in wiring

Suit for all cookware materials

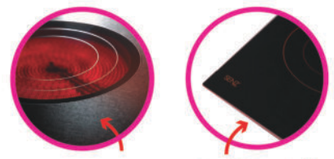

Matte-Finished Surface

Special Rose Gold Frame Design

PREMIUM

RC220FT Double Ceramic MultiCooker

Retail Price: EM: RM2,899 WM: RM2,699

Model No: SZ- RC220FT

Key Features

- Matte-Finished, Heat resistance ceramic glass FUTEX
- Dual Heating Zone – Ceramic (Left) + Ceramic (Right)
- 4400W Power Output EGO
- Heating Element – Germany
- 12 Heat Levels Adjustment
- Sleek Touch Control with LED Display
- 24 Hours Timer Function
- 60 Minutes Auto Cut-Off
- Electronic Overheating Protection

Additional Practical Features

- Cooking Functions
- High Power Output
- Energy Efficient
- Child Safety Lock

Installation & Compatibility

- Glass Size – 690mm (W) x 420mm (L)
- Built-In Hole Dimension – 670mm (W) x 400mm (L)
- Power Supply : 220 – 240V ~ 50Hz / 60Hz
- Standby Electricity : 4W
- Installation Type – Free Standing or Built-In

Plug Used:

Direct Built-in wiring

Suit for all cookware materials

Matte-Finished Surface

Installation fees is NOT included for all the price stated above & price is subject to change without prior notice

PREMIUM

GS388 Tri-Ringz Twin Burner Gas Stove

Retail Price: EM: RM1,899 WM: RM1,699

Model No: SZ- GS388

CAUTION : Please ensure that the burner cap is placed securely and evenly to prevent any gas leaks and potential fire hazards.

OPERATION : 1 - Pressed and hold the knob for 3 - 5 seconds before turning it.
2 - After flame ignites, keep pressing the knob for 5 more seconds before releasing it to prevent the flame from going out.

OPERATION : When either of the knobs is pressed, both ignition pins will light up, indicating that the gas is ready to ignite. However, the gas supply for each burner is separate, so only the burner that has been turned on will ignite and produce a flame.

Key Features

- Triple Ringz Design
- 6.4kw/h Heat Intensity
- Safety Valve
- 10 Seconds Auto Cut-Off
- Gloss Finished, Heat Resistance Ceramic Glass

Additional Practical Features

- Battery Operated Auto-Ignition
- Removable Burner Cap

Installation Accessories Included

- Gas Type – LPG
- Gas Pressure – 2800 kPA
- Installation Type – Free Standing or Built-In

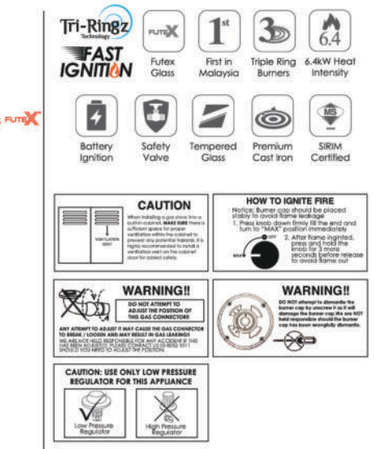

Triple Ring Burners

Special Wok Design
To reduce heat during cooking

Futex Glass
Heat resistance tempered glass

PREMIUM NEW

SAPPHIRE Tri-Ringz Twin Burner Gas Stove with Timer

Retail Price: EM: RM2,199 WM: RM1,999

Model No: SZ- GS1328FL

Key Features

- Triple Ringz Design
- 180 Minutes Timer Function
- 5.8kw/h Heat Intensity
- 0-Second Ignition
- Safety Valve
- 10 Seconds Auto Cut-Off
- NANO Coating, Heat Resistance Ceramic Glass

Additional Practical Features

- Battery Operated Auto-Ignition
- Flexible Base Design
- Removable Burner Cap

Installation Accessories Included

- Gas Type – LPG
- Gas Pressure – 2900 kPA
- Installation Type – Free Standing or Built-In

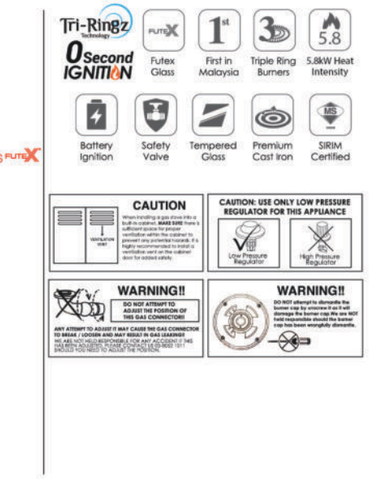

Triple Ring Burners

Special Wok Design
To reduce heat during cooking

Futex Glass
Heat resistance tempered glass

Timer
Up to 180 Minutes

Nano Coating

CAUTION : Please ensure that the burner cap is placed securely and evenly to prevent any gas leaks and potential fire hazards.

Installation fees is NOT included for all the price stated above & price is subject to change without prior notice

FLEXIBLE BASE

Can fit in variety of built-in hole
350-430 mm (W) x 650-750 mm (L)

Precise & Efficient
rectangle shape design

VS

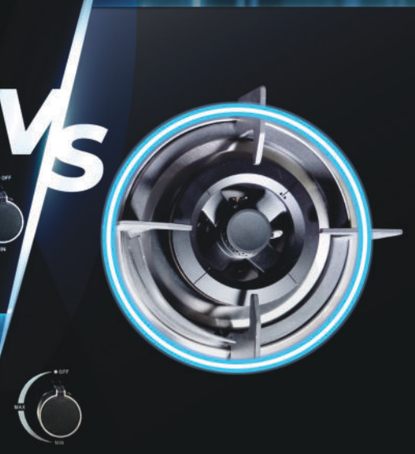

Elegant & Timeless
round shape design

Why Flexible Base?

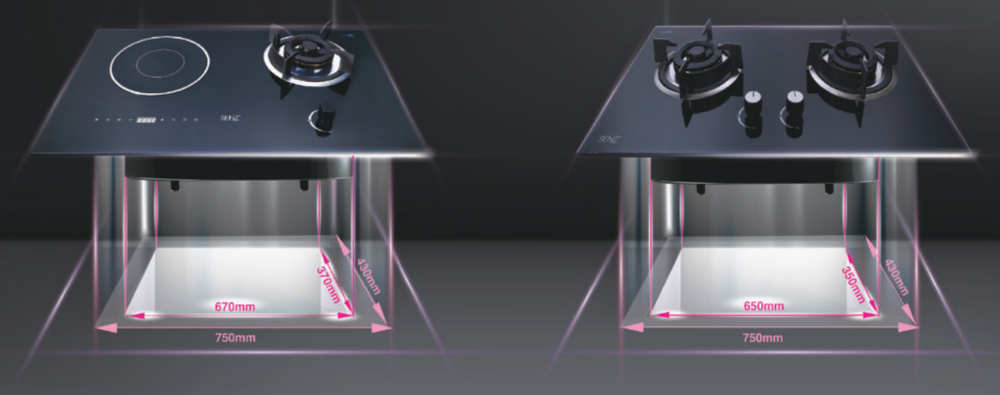

Introducing our latest gas cooker with a flexible base that can be customized to fit a variety of hole sizes. Say goodbye to the hassle of finding a gas stove that fits your existing build-in hole. Our adjustable base provides the perfect solution for customers who are looking to upgrade to a new gas stove but worry about compatibility issues. Experience the convenience and peace of mind knowing that our gas cooker is designed with your needs in mind. Upgrade your kitchen with our versatile gas cooker today!

PREMIUM

QUADRO Flexible Base Sealed Burner Gas Stove

Retail Price: EM: RM1,799 WM: RM1,599

Model No: SZ- GS6852FL

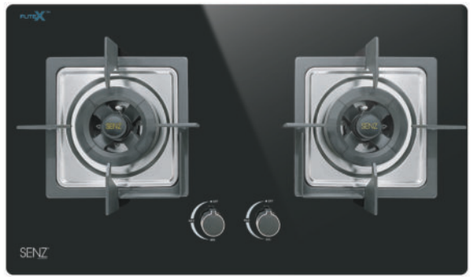

Key Features

- Easy-Clean Sealed Burner with Square Plate Base
- 5.2kw/h Heat Intensity
- Safety Valve
- 10 Seconds Auto Cut-Off
- Gloss Finished, Heat Resistance Ceramic Glass FUTEX

Additional Practical Features

- Battery Operated Auto-Ignition
- Exclusive SENZ Logo on Burner Cap
- Flexible Base Design
- Removable Burner Cap
- Square Wok Rack Design

Installation & Compatibility

- Gas Type – LPG
- Gas Pressure – 2800 kPA
- Installation Type – Free Standing or Built-In

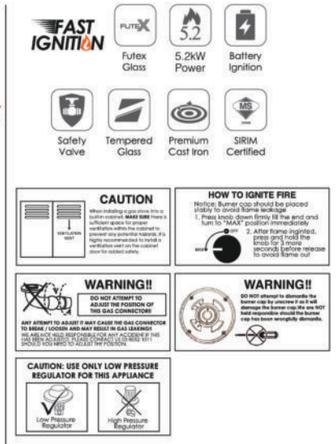

CAUTION : Please ensure that the burner cap is placed securely and evenly to prevent any gas leaks and potential fire hazards.
OPERATION : 1 - Pressed and hold the knob for 3 - 5 seconds before turning it.
2 - After flame ignites, keep pressing the knob for 5 more seconds before releasing it to prevent the flame from going out.
OPERATION : When either of the knobs is pressed, both ignition pins will light up, indicating that the gas is ready to ignite. However, the gas supply for each burner is separate, so only the burner that has been turned on will ignite and produce a flame.

Exclusive SENZ Logo on Cap Burner
Sealed Burner
Special Wok Design To reduce heat during cooking
Futex Glass Heat resistance tempered glass

PREMIUM

GS368FL Flexible Base Sealed Burner Gas Stove

Retail Price: EM: RM1,799 WM: RM1,599

Model No: SZ- GS368FL

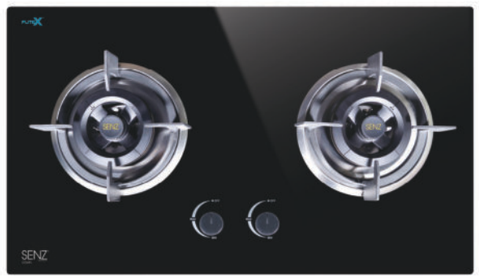

Key Features

- Easy-Clean Sealed Burner with Round Plate Base
- 5.2kw/h Heat Intensity
- Safety Valve
- 10 Seconds Auto Cut-Off
- Gloss Finished, Heat Resistance Ceramic Glass FUTEX

Additional Practical Features

- Battery Operated Auto-Ignition
- Exclusive SENZ Logo on Burner Cap
- Flexible Base Design
- Removable Burner Cap

Installation & Compatibility

- Gas Type – LPG
- Gas Pressure – 2800 kPA
- Installation Type – Free Standing or Built-In

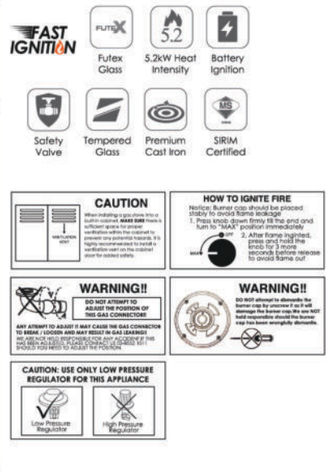

CAUTION : Please ensure that the burner cap is placed securely and evenly to prevent any gas leaks and potential fire hazards.
OPERATION : 1 - Pressed and hold the knob for 3 - 5 seconds before turning it.
2 - After flame ignites, keep pressing the knob for 5 more seconds before releasing it to prevent the flame from going out.
OPERATION : When either of the knobs is pressed, both ignition pins will light up, indicating that the gas is ready to ignite. However, the gas supply for each burner is separate, so only the burner that has been turned on will ignite and produce a flame.

Exclusive SENZ Logo
Sealed Burner
Special Wok Design To reduce heat during cooking
Futex Glass Heat resistance tempered glass

Installation fees is NOT included for all the price stated above & price is subject to change without prior notice

PREMIUM NEW

EMERALD Smart AIFlow Twin Burner Gas Stove with Timer

Retail Price: EM: RM2,199 WM: RM1,999

Model No: SZ- GS1398FL- B

Key Features

- Smart AIFlow System
- No Adjustment of Air Regulator
- Enhanced Safety
- 180 Minutes Timer Function
- 5.6kw/h Heat Intensity
- 0-Second Ignition
- Safety Valve
- 10 Seconds Auto Cut-Off
- NANO Coating, Heat Resistance Ceramic Glass FUTEX

Additional Practical Features

- Battery Operated Auto-Ignition
- Flexible Base Design
- Removable Burner Cap
- Special Windshield Wok Rack

Installation Accessories Included

- Gas Type – LPG
- Gas Pressure – 2900 kPA
- Installation Type – Free Standing or Built-In

Sealed Burner

Special Wok Design
To reduce heat during cooking

Futex Glass
Heat resistance tempered glass

Smart AIFlow
Technology

Timer
Up to 180 Minutes

Nano Coating

CAUTION : Please ensure that the burner cap is placed securely and evenly to prevent any gas leaks and potential fire hazards.

PREMIUM

RI3200i 2 in 1 Smart Cooker

Retail Price: EM: RM2,199 WM: RM1,999

Model No: SZ- RI3200i

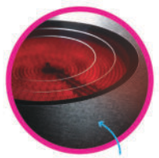
Matte-Finished Surface

Preset Timer

Key Features

- Matte-Finished, Heat resistance ceramic glass
- Dual Heating Zone – Induction (Left) + Ceramic (Right)
- 2800W Power Output – Total power sharing 2800W
- Wattage-Based Heat Adjustment
- Sleek Touch Control with LED Display
- 24 Hours Timer Function
- 12 Hours Preset Timer Function
- 60 Minutes Auto Cut-Off
- Electronic Overheating Protection

Additional Practical Features

- Cooking Functions
- High Power Output
- Energy Efficient
- Child Safety Lock

Installation Accessories Included

- Glass Size – 690mm (W) x 420mm (L)
- Built-In Hole Dimension – 670mm (W) x 400mm (L)
- Power Supply – 220 – 240V ~ 50Hz / 60Hz
- Standby Electricity – 2W
- Installation Type – Free Standing or Built-In

Plug Used

13amp

Suit for all cookware materials

PREMIUM

OV759-9F Push Knob Digital Multioven

Retail Price: EM: RM2,849 WM: RM2,649

Model No: SZ- OV759-9F

Push Knob + Electronic Design

Removable Inner Rack for Easy Cleaning

Retractable Track

Highlights:

- 9 Cooking Functions
- 75 Litres Capacity
- With Rotisseries Baking Mode
- Mechanical Push Knob Design + Electronic
- 24 Hours Digital Time Display

All in 1 functions

- Retractable Track
- Triple Glazed Removable Tempered Glass
- Removable Door
- Removable Inner Rack
- Cavity Cooling System
- Child Safety Lock

Installation & Compatibility

- Voltage/Frequency – 220-240V/50~60Hz
- Power Consumption – 2000W
- Interior Material – Iron Coating Enamel
- Installation Type – Built-In

Accessories Included

- Sliding Ware x 1
- Drip Tray x 1
- Inner Rack x2
- Rotisserie Spit Rod x 1

Plug Used:

Direct Built-in wiring

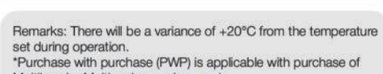

Remarks: There will be a variance of +20°C from the temperature set during operation.
*Purchase with purchase (PWP) is applicable with purchase of Multihood + Multicooker package only

WM: RM2,149*
EM: RM2,349*
PWP

PREMIUM

MW2510 Fully Digital Built-in Microwave Oven

Retail Price: EM: RM2,749 WM: RM2,549

Model No: SZ- MW2510

Highlights:

- Capacity : 25 Litres
- Power Consumption : 240W ~ 50Hz, 1400W
- Operating Frequency : 2,450MHz
- 24 hour digital time display
- Child Safety Lock
- Auto Weight Defrost
- Auto Menu
- Disinfection Mode

Accessories Included:

- Grill Rack x1
- Glass tray x1
- Roller Ring x1

Plug Used:

13amp

Remarks: There will be a variance of +20°C from the temperature set during operation.
*Purchase with purchase (PWP) is applicable with purchase of Multihood + Multicooker package only

WM: RM2,049*
EM: RM2,249*
PWP

Installation fees is NOT included for all the price stated above & price is subject to change without prior notice

PREMIUM

ALL-IN-ONE FLEXI STEAM PRO 34L

Retail Price: EM: RM3,999 WM: RM3,799

Model No: SZ- SOV3412

Highlights:

- All in 1 Functions
  – Bake, Grill, Steam and Air Fry
- 34 Litres Capacity
- 12 Preset Auto Menu
- 24 Hours Digital Time Display

All in 1 functions

- Fermentation
- Defrost
- Triple Glazed Removable Tempered Glass
- Removable Door
- Removable Inner Rack
- 1000ml Capacity External Water Container
- Child Safety Lock

Installation & Compatibility

- Voltage/Frequency – 230V/50Hz
- Power Consumption – 2000W
- Interior Material – Stainless Steel SUS304
- Installation Type – Built-In

Accessories Included

- Baking Tray x1
- Drip Tray x1
- Inner Rack x2

Plug Used:

13amp

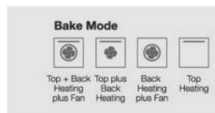

Remarks: There will be a variance of +20°C from the temperature set during operation.
*Purchase with purchase (PWP) is applicable with purchase of Multihood + Multicooker package only

Auto Menu Function

34L Capacity

External Water Container

WM: RM3,299*
EM: RM3,499*
PWP

PREMIUM NEW

SENZ NanoWash7 Digital Program Dishwasher

Retail Price: EM: RM2,899 WM: RM2,699

Model No: SZ-DW001

Key Features

- Free Standing Design
  – use it right out of the box, even in spaces without fixed plumbing. Freedom to place it anywhere.
- Capacity – 3 to 4 Full Sets of Dishes
  – perfect for small households or apartments. Can be fit for:
  – 1pcs x large plates 27cm
  – 2pcs x medium plates 22cm
  – 2pcs x bowls 15.3cm
  – 3pcs x small bowls 12.3cm
  – 2 x cups
  – 3 x sauce bowl 10cm
  – 1 x small knife
  – 3 x pair of Chopsticks
  – 2 x forks
  – 2 x spoons
  – 1 x ladle spoons
- No Plumbing? No Problem! Flexible Water Supply Modes
  – simply add water manually or connect directly to a water pipe – perfect for any kitchen setup.
- All-in-One Multi-Function Use
  – a dishwasher, vegetable washer, dish cabinet and sterilizer – all in one compact unit.
- Drying Function
- Dual Function – Wash Dishes & Fresh Produce
  – gently clean fruits and vegetables with a dedicated cycle.
- 7 Auto Cleaning Programs
  – just choose the perfect wash with a single touch
  – Normal (69 mins)
  – ECO (68 mins)
  – Quick (29 mins)
  – Strong (89 mins)
  – Glass (50 mins)
  – Fruit (19 mins)
  – Self-clean (79 mins)
- 72 Hours Ventilated Storage
  – after washing, your dishes stay fresh with automatic ventilation that prevents odor and bacteria

Additional Practical Features

- Compact Design, Maximum Efficiency
- Hygienic, Hassle-Free Operation
- Child Safety Lock

Installation & Compatibility

- Product Dimension
  – 428mm (W) x 425mm (L) x 458mm (H)
- Installation Type – Free Standing / Portable Only

Accessories Included

- Inlet Hose for Water Pipe x1
- Drain Hose x1
- Water Container Cup x1
- Fruit Basket x1

Plug Used:

13amp

Installation fees is NOT included for all the price stated above & price is subject to change without prior notice

PREMIUM NEW

BRILLO
Black Matt Surface Designer Pendant Hood with Remote Control

Retail Price: EM: RM2,299 WM: RM2,099

Model No: SZ- ICH188

Key Features
- Latest Pendant Hood Design
- 1200 m3/h Suction Power
- Convenient Remote Control

Additional Practical Features
- Sleek & Modern Design
- Recirculation Option Only
- LED lighting

Installation Accessories Included
- 1 pcs Washable Buffer Filter
- 2 pcs Charcoal Filter

Recommended Installation Height
- From bottom of hood to your counter top
  – For Electric Hob / Gas Hob: 750mm
  (or adjust based on your ceiling height)

Optional Accessories
- Charcoal Filter

Plug Used
13amp

Installation fees is NOT included for all the price stated above & price is subject to change without prior notice

PREMIUM NEW

SERENO
Black Glass Designer Pendant Hood 750mm with Remote Control

Retail Price: EM: RM2,799 WM: RM2,599

Model No: SZ- ICH608

With Remote Control

Key Features
- Latest Pendant Hood Design
- 1200 m3/h Suction Power
- Convenient Remote Control

Additional Practical Features
- Sleek & Modern Design
- Recirculation Option Only
- LED lighting

Installation Accessories Included
- 1 pcs Washable Buffer Filter
- 2 pcs Charcoal Filter

Recommended Installation Height
- From bottom of hood to your counter top
  – For Electric Hob / Gas Hob: 750mm
  (or adjust based on your ceiling height)

Optional Accessories
- Charcoal Filter

Plug Used
13amp

Installation fees is NOT included for all the price stated above & price is subject to change without prior notice

PREMIUM NEW

VENTE Black Glass Designer Pendant Hood with Remote Control

Retail Price: **EM: RM2,999 WM: RM2,799**

Model No: SZ- ICH328

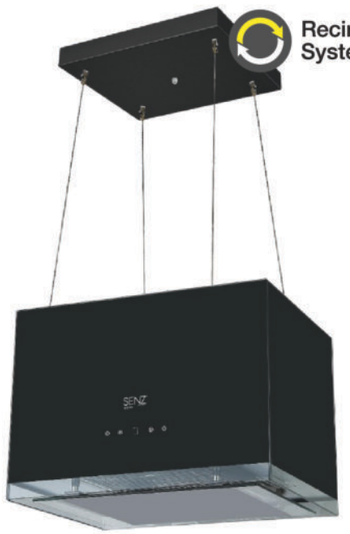

Recirculating System

With Remote Control

Key Features

- Latest Pendant Hood Design
- 1200 m3/h Suction Power
- Convenient Remote Control

Additional Practical Features

- Sleek & Modern Design
- Recirculation Option Only
- LED lighting

Installation Accessories Included

- 1 pcs Washable Buffer Filter
- 2 pcs Charcoal Filter

Recommended Installation Height

- From bottom of hood to your counter top
  – For Electric Hob / Gas Hob: 750mm
  (or adjust based on your ceiling height)

Optional Accessories

- Charcoal Filter

Plug Used

13amp

Installation fees is NOT included for all the price stated above & price is subject to change without prior notice

DIMENSION

SENZ ADEL(CH9560DC)

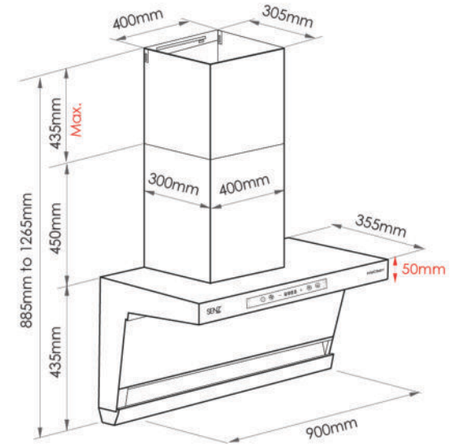

SENZ VISTA(CH9670DC)

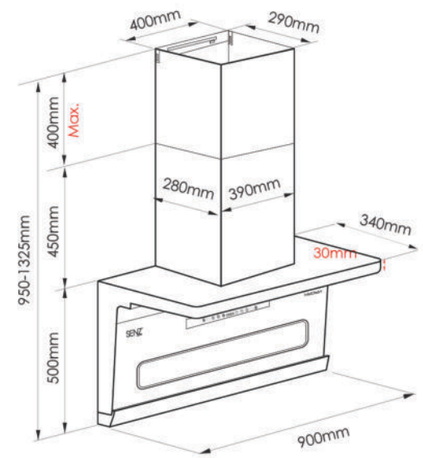

SENZ STELLA DC(CH9166DC)

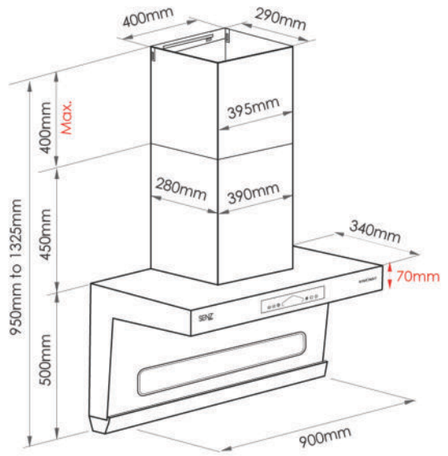

SENZ NOVA(CH2898DC)

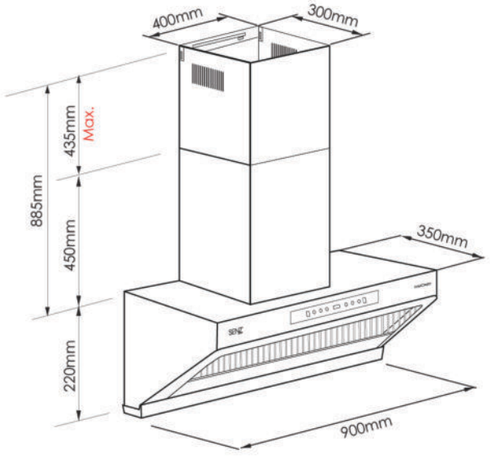

SENZ BRILLO(ICH188)

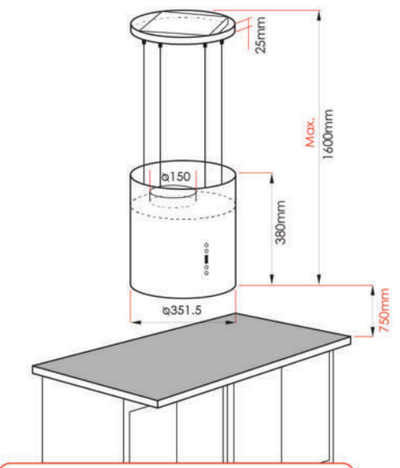

*Recommended height from table top 750mm

SENZ SERENO(CH608)

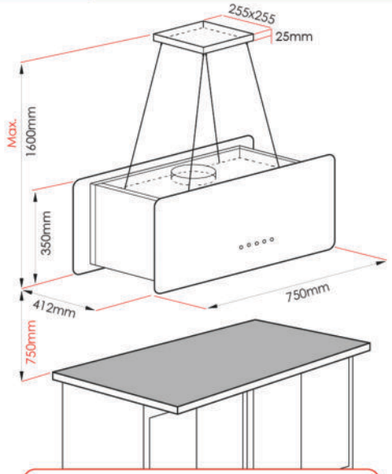

*Recommended height from table top 750mm

SENZ VENTE(ICH328)

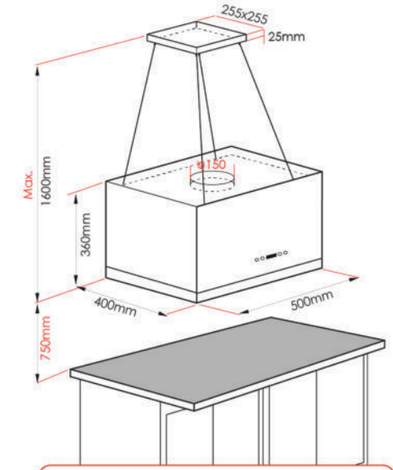

*Recommended height from table top 750mm

DIMENSION

SENZ SAPPHIRE(GS1328FL) / EMERALD(GS1398FL- B)

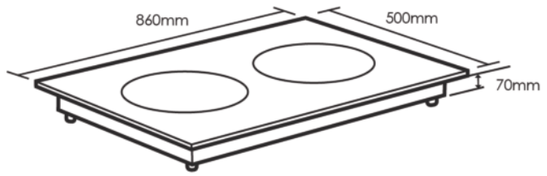

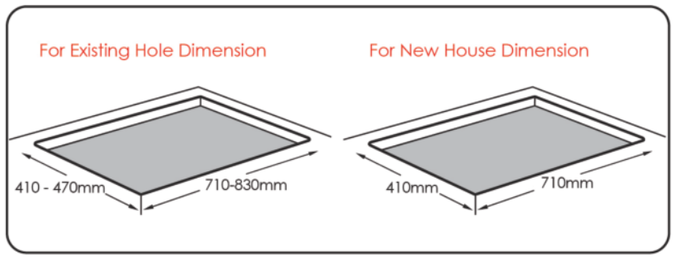

SENZ RI6200i

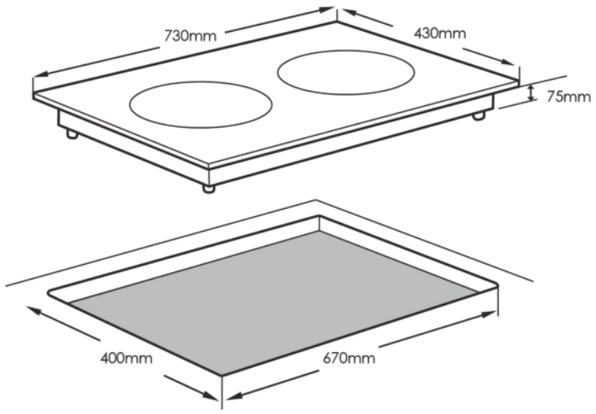

SENZ RC220FT/ RI3200i

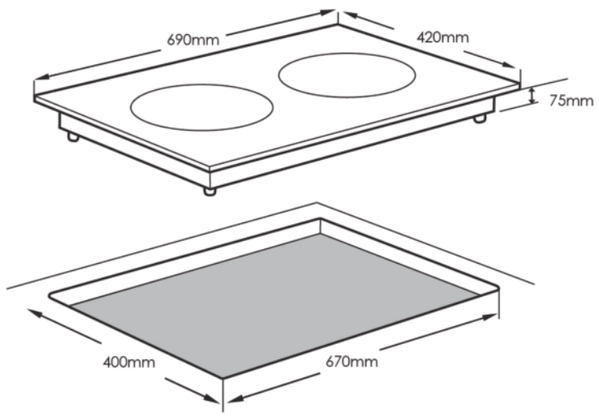

SENZ GS388

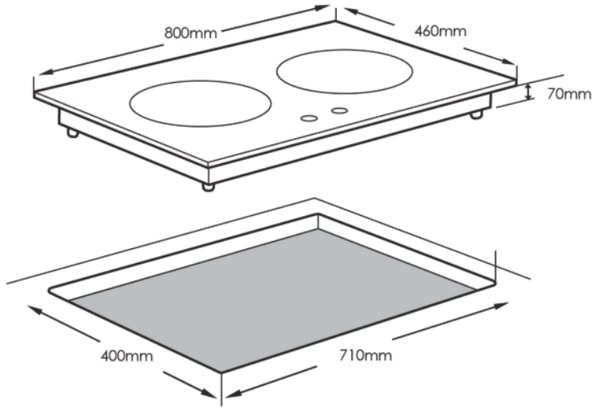

SENZ QUADRO

For Existing Hole
Dimension

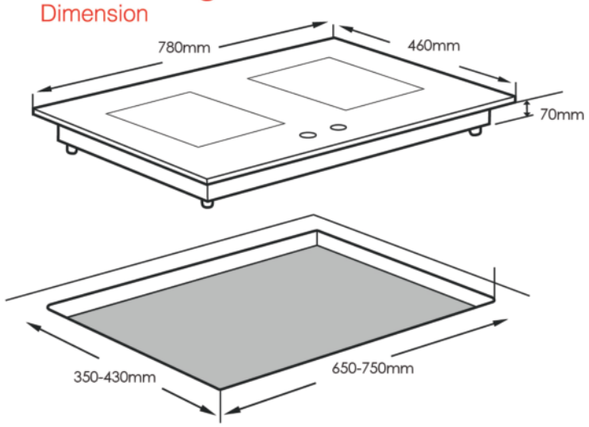

For New House
Dimension

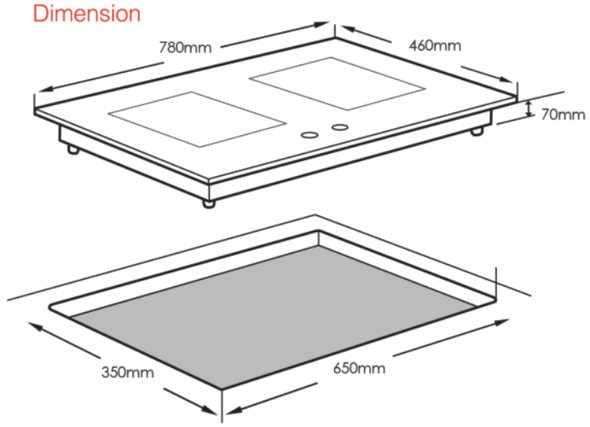

DIMENSION

SENZ GS368FL

For Existing Hole
Dimension

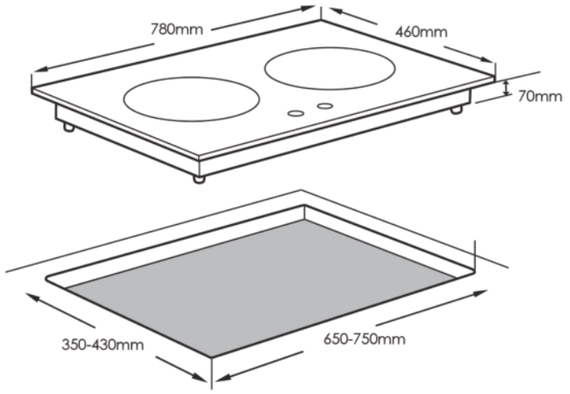

For New House
Dimension

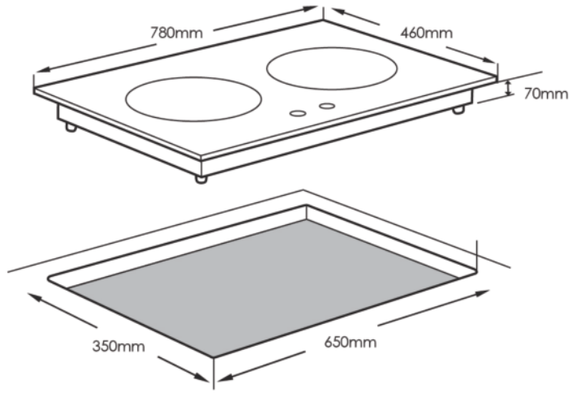

SENZ FlexiSteamPro(SOV3412)

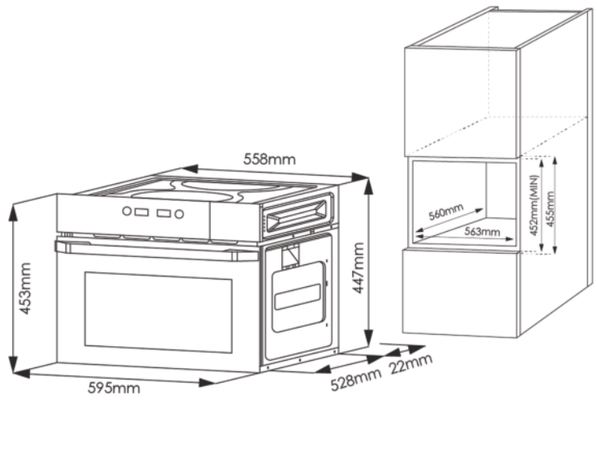

SENZ OV759-9F

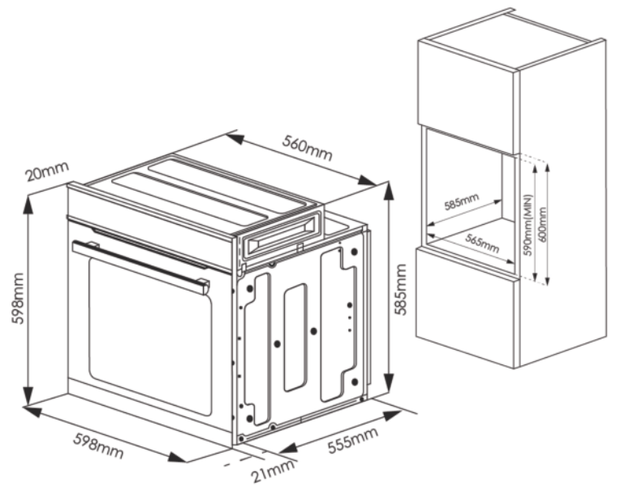

SENZ MW2510

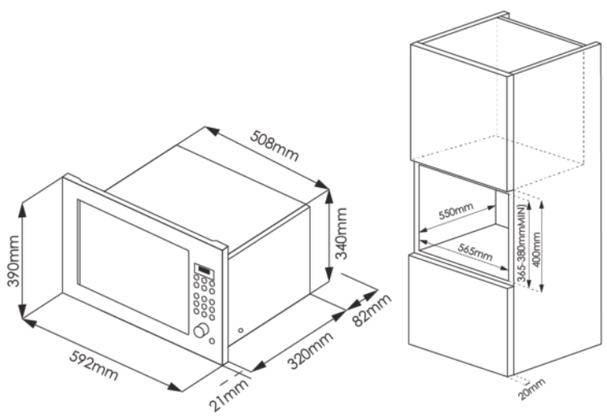

SENZ NanoWash(DW001)

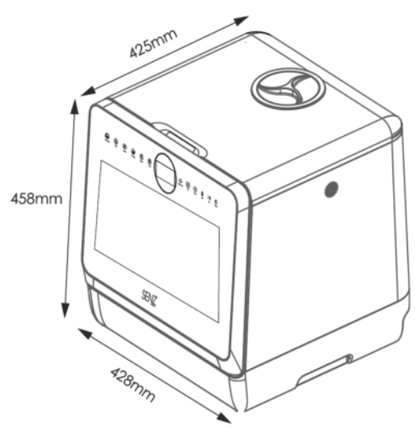

CLASSIC

Collection

CLASSIC NEW

ENZO IntelSync Cooker Hood with Nano Coating

Retail Price: EM: RM1,799 WM: RM1,599

Model No: SZ- CH8360AC

Key Features

- Latest Angled Design
- 1800 m3/h Suction Power
- Motion Sensor Technology
- SilentAC Motor
- Equipped with Safety Explosion Proof Film
- Heat Auto Cleaning Function
- Equip with intelSync Technology
- Nano Coating Body

Additional Practical Features

- 5x Larger Metal Oil Cup
- LED lighting
- Removable Metal Filter

Installation Accessories Included

- 2 pcs Washable Metal Filter
- 2 pcs Metal Chimney Cover
- Stainless Steel Wall Cap
- 3 meters Aluminum Hose
  (hose dimension: 180mm (7"))
- Ducting/Coring Size: 150mm = 6 inches (includes connector to adapt from 180mm to 150mm for easy installation)

Recommended Installation Height

- From bottom of hood to your counter top
  – For Electric Hob: 300mm ~ 450mm
  – For Gas Hob: 400mm ~ 500mm

Optional Accessories

- Charcoal Filter

Plug Used

13amp

Installation fees is NOT included for all the price stated above & price is subject to change without prior notice

CLASSIC NEW

HERMOSA Ultra Slim Heat Pro intelClean™ Cooker Hood

Retail Price: EM: RM2,599 WM: RM2,399

Model No: SZ-CH8380AC

Key Features

- Sleek & Ultra Slim Design
- 1950 m3/h Suction Power + Turbo Boost
- Motion Sensor Technology
- Heat Auto Cleaning Function

Additional Practical Features

- 5x Larger Metal Oil Cup
- LED lighting
- Removable Glass Panel

Installation Accessories Included

- Chimney Cover
  – 1st Glass Chimney
  – 2nd Metal Chimney
- Stainless Steel Wall Cap
- 3 meters Aluminum Hose
  (hose dimension: 180mm (7"))
- Ducting/Coring Size: 150mm = 6 inches (includes connector to adapt from 180mm to 150mm for easy installation)

Recommended Installation Height

- From bottom of hood to your counter top
  – For Electric Hob / Gas Hob:
  350mm ~ 400mm

Optional Accessories

- Charcoal Filter

Plug Used

13amp

CLASSIC NEW

BONITA Mystic Grey Heat Pro intelClean™ Chimney Cooker Hood

Retail Price: EM: RM2,749 WM: RM2,549

Model No: SZ- CH336iAC-G

Key Features

- Modern Chimney Design
- 1600 m3/h Suction Power + Turbo Boost
- Motion Sensor Technology
- Heat Auto Cleaning Function
- Slim Body Design

Additional Practical Features

- Auto-Opening Glass Panel
- 5x Larger Metal Oil Cup
- LED lighting
- Removable Stainless Steel Buffer Filter

Installation Accessories Included

- 3 sets Washable Stainless Steel Buffer Filter
- 2 pcs Metal Chimney Cover
- Stainless Steel Wall Cap
- 3 meters Aluminum Hose
  (hose dimension: 180mm (7"))
- Ducting/Coring Size: 150mm = 6 inches (includes connector to adapt from 180mm to 150mm for easy installation)

Recommended Installation Height

- From bottom of hood to your counter top
  – For Electric Hob / Gas Hob:
  600mm ~ 700mm

Optional Accessories

- Charcoal Filter

Plug Used

13amp

Installation fees is NOT included for all the price stated above & price is subject to change without prior notice

DESIGNED FOR THE MODERN KITCHEN

1 6mm Slim Hidden Concept

Ultra slim design blends seamlessly into your kitchen. Leaving you with an aesthetically pleasing art piece under its spotlight.

2 Stylish Touch Control

Simplistic panel design with responsive touch control adds a modern appeal to your ease of use.

3 Strong Suction Power

High-efficiency performance effectively removes any oil and odour to help minimise your kitchen cleaning chores.

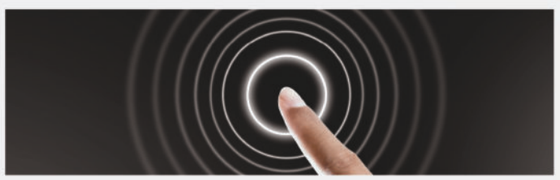

4 Retractable Flip Glass Panel

Hassle-free retractable mechanism allows for easy cleaning of trapped grease while enhancing overall visual appeal.

5 3-Speeds Power Control

Different power settings to best suit various styles of cooking and ensure optimum efficiency.

THINGS NEED TO TAKE NOTE

before installing our CH1288RC Invisible Hood

STEP 1 : If you can open a hole in your kitchen we will suggest you to **open a hole to extract the grease out.**
P.S. Hose and Wall Cap are sold separately.

STEP 2 : If you are not allowed to open a hole in your kitchen then you need to use our **recirculation system** to operate the Cooker Hood. Recirculation system consist of **Aluminum Filter and Charcoal Filter.**

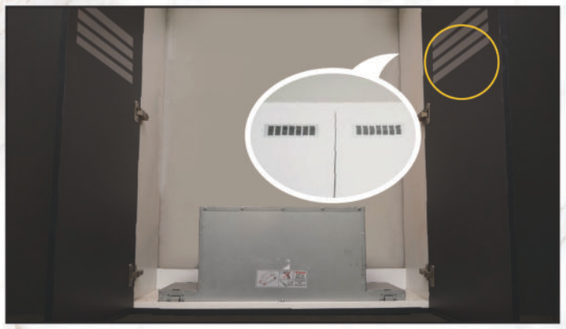

STEP 3 : If you are using recirculation system, please ensure that you have enough ventilation in your cabinet to **allow clean air to flow**. For example, some open ventilation holes on your cabinet door. This can also **prevent your cabinet door from vibrating** while operating the hood.

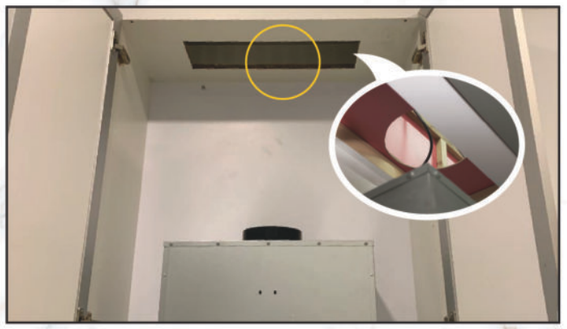

STEP 4 : You can also **open a hole at the top** of your kitchen cabinet.

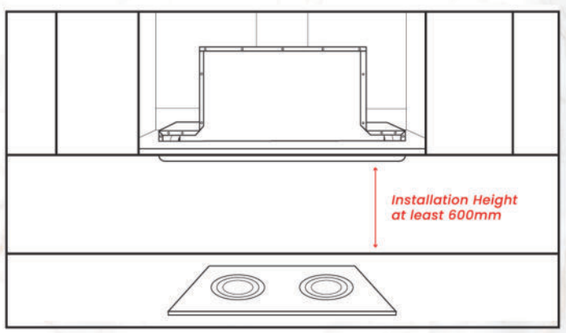

STEP 5 : Kindly take note that the installation height between Cooker Hood and Stove, the recommended installation height is **around 600mm.**

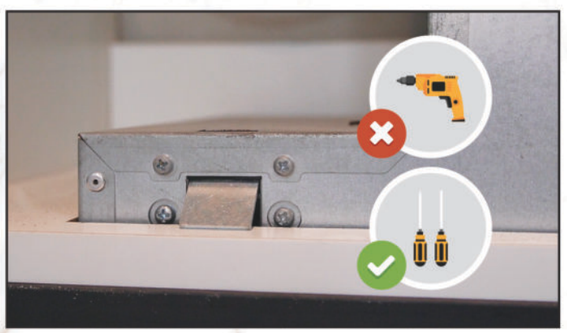

STEP 6 : To avoid the clip from breaking easily, please do not tighten it with **electric drill;** use only **screw driver** to tighten it.

CLASSIC NEW **CH1288RC** Invisible Cooker Hood — **Retail Price: EM: RM1,949 WM: RM1,749**

Model No: SZ-CH1288RC

Retractable Flip Glass Panel

Mystery Black

Key Features
- Latest Invisible Design
- 1200 m3/h Suction Power
- 6mm Slim & Stylish Glass Panel

Additional Practical Features
- Modern & Stylish Design
- LED lighting

Installation Accessories Included
- 1 pcs Washable 6 Layers Aluminum Filter
- 2 pcs Charcoal Filter
  (for recirculating system/ductless)

Recommended Installation Height
- From bottom of hood to your counter top
  – For Electric Hob / Gas Hob:
  600mm (or adjust based on your kitchen cabinet height)

Optional Accessories
- 3 meters aluminum hose
  (hose dimension: 150mm (6"))

Stainless Steel Wall Cap

Plug Used
13amp

Remarks: Kitchen cabinet board thickness cannot exceed 18mm in order to install this invisible hood
Remarks: For recycle mode, please ensure there is enough capacity in the cabinet for air to flow as air to flow as that release back by the hood might cause the cabinet door to vibrate during operation. You may consult our authorized dealers or customer service for further clarification.

CLASSIC **VRC868i** 2 in 1 Smart Cooker — **Retail Price: EM: RM1,849 WM: RM1,649**

Model No: SZ- VRC868i

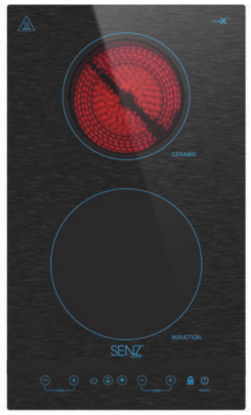

Key Features
- Matte-Finished, Heat resistance ceramic glass FUTEX
- Vertical Design
- Dual Heating Zone
  – Induction (Upper) + Ceramic (Lower)
- 2800W Power Output
- Wattage-Based Heat Adjustment
- Sleek Touch Control with LED Display
- 99 Minutes Timer Function
- 120 Minutes Auto Cut-Off
- Electronic Overheating Protection

Additional Practical Features
- Cooking Functions
- High Power Output
- Energy Efficient
- Child Safety Lock

Installation & Compatibility
- Glass Size – 300mm (W) x 510mm (L)
- Built-In Hole Dimension – 280mm (W) x 480mm (L)
- Power Supply – 220 – 240V ~ 50Hz / 60Hz
- Standby Electricity – 2W
- Installation Type – Free Standing or Built-In

Plug Used
13amp

Suit for all cookware materials
Claypot, Ceramic, Glass, Stainless Steel, Normal Steel, Aluminium Non-stick, Copper, Cast Iron

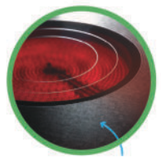
Matte-Finished
Surface

Installation fees is NOT included for all the price stated above & price is subject to change without prior notice

CLASSIC NEW **GS202** Table Top Spiral Flame Gas Stove With Safety Valve — **Retail Price: EM: RM549 WM: RM499**

Model No: SZ-GS202

CAUTION : Please ensure that the burner cap is placed securely and evenly to prevent any gas leaks and potential fire hazards.
OPERATION : 1 - Pressed and hold the knob for 3 - 5 seconds before turning it.
2 - After flame ignites, keep pressing the knob for 5 more seconds before releasing it to prevent the flame from going out.
OPERATION : When either of the knobs is pressed, both ignition pins will light up, indicating that the gas is ready to ignite. However, the gas supply for each burner is separate, so only the burner that has been turned on will ignite and produce a flame.

Key Features
- Safety Valve
- Portable Safety Valve Gas Stove
- Spiral Flame Burner Design
- 4.5kw/h Heat Intensity
- 10 Seconds Auto Cut-Off
- Gloss-Finished Glass

Additional Practical Features
- Removable Burner Cap

Installation & Compatibility
- Gas Type – LPG
- Gas Pressure – 2800 kPA
- Installation Type – Free Standing / Portable Only

Spiral Flame
Burner Design

Safety Valve
Prevent an explosion when unlit within 10 seconds

Futex Glass
Heat Resistance
Tempered Glass

CLASSIC NEW **GS303** Table Top Linear Flame Gas Stove With Safety Valve — **Retail Price: EM: RM549 WM: RM499**

Model No: SZ-GS303

CAUTION : Please ensure that the burner cap is placed securely and evenly to prevent any gas leaks and potential fire hazards.
OPERATION : 1 - Pressed and hold the knob for 3 - 5 seconds before turning it.
2 - After flame ignites, keep pressing the knob for 5 more seconds before releasing it to prevent the flame from going out.
OPERATION : When either of the knobs is pressed, both ignition pins will light up, indicating that the gas is ready to ignite. However, the gas supply for each burner is separate, so only the burner that has been turned on will ignite and produce a flame.

Key Features
- Safety Valve
- Portable Safety Valve Gas Stove
- Linear Flame Burner Design
- 4.5kw/h Heat Intensity
- 10 Seconds Auto Cut-Off
- Gloss-Finished Glass

Additional Practical Features
- Removable Burner Cap

Installation & Compatibility
- Gas Type – LPG
- Gas Pressure – 2800 kPA
- Installation Type – Free Standing / Portable Only

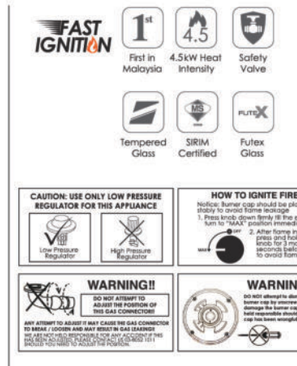

Linear Flame
Burner Design

Safety Valve
Prevent an explosion when unlit within 10 seconds

Futex Glass
Heat Resistance
Tempered Glass

Installation fees is NOT included for all the price stated above & price is subject to change without prior notice

CLASSIC NEW **RUBY** IntelSync Twin Burner Gas Stove with Nano Coating **Retail Price: EM: RM1,099 WM: RM899**

Model No: SZ-GS980FL

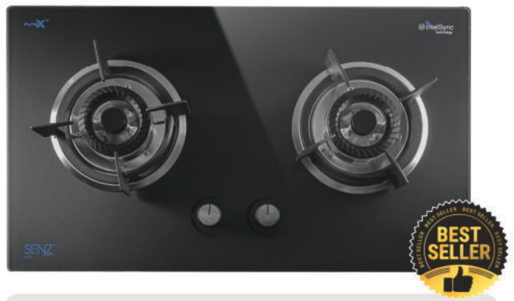

CAUTION : Please ensure that the burner cap is placed securely and evenly to prevent any gas leaks and potential fire hazards.
OPERATION : 1 - Pressed and hold the knob for 3 - 5 seconds before turning it.
2 - After flame ignites, keep pressing the knob for 5 more seconds before releasing it to prevent the flame from going out.
OPERATION : When either of the knobs is pressed, both ignition pins will light up, indicating that the gas is ready to ignite. However, the gas supply for each burner is separate, so only the burner that has been turned on will ignite and produce a flame.

Key Features

- Equip with intelSync Technology -Smart AI ON / OFF Function
- 5.0kw/h Heat Intensity
- Safety Valve
- 10 Seconds Auto Cut-Off
- NANO Coating Glass

Additional Practical Features

- Battery Operated Auto-Ignition
- Flexible Base Design
- Removable Burner Cap
- Round Wok Rack Design

Installation & Compatibility

- Gas Type – LPG
- Gas Pressure – 2800 kPA
- Installation Type – Free Standing or Built-In

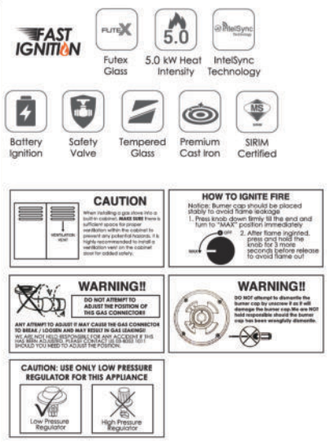

Special Wok Design To reduce heat during cooking

Nano Coating

Futex Glass Heat resistance tempered glass

Installation fees is NOT included for all the price stated above & price is subject to change without prior notice

CLASSIC NEW **AMBER** IntelSync Twin Burner Gas Stove with Nano Coating **Retail Price: EM: RM1,099 WM: RM899**

Model No: SZ- GS6890FL

CAUTION : Please ensure that the burner cap is placed securely and evenly to prevent any gas leaks and potential fire hazards.
OPERATION : 1 - Pressed and hold the knob for 3 - 5 seconds before turning it.
2 - After flame ignites, keep pressing the knob for 5 more seconds before releasing it to prevent the flame from going out.
OPERATION : When either of the knobs is pressed, both ignition pins will light up, indicating that the gas is ready to ignite. However, the gas supply for each burner is separate, so only the burner that has been turned on will ignite and produce a flame.

Key Features

- Equip with intelSync Technology -Smart AI ON / OFF Function
- 5.0kw/h Heat Intensity
- Safety Valve
- 10 Seconds Auto Cut-Off
- NANO Coating Glass

Additional Practical Features

- Battery Operated Auto-Ignition
- Flexible Base Design
- Removable Burner Cap
- Square Wok Rack Design

Installation & Compatibility

- Gas Type – LPG
- Gas Pressure – 2800 kPA
- Installation Type – Free Standing or Built-In

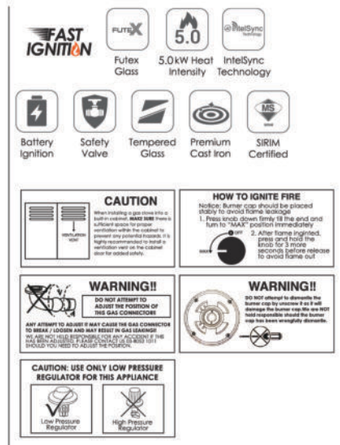

Special Wok Design To reduce heat during cooking

Nano Coating

Futex Glass Heat resistance tempered glass

Installation fees is NOT included for all the price stated above & price is subject to change without prior notice

CLASSIC NEW **OV7529-9F** Digital MultiOven

Retail Price: EM: RM2,199 WM: RM1,999

Model No: SZ-OV7529

Highlights:

- 9 Cooking Functions
- 72 Litres Capacity
- Knob Design + Electronic
- 24 Hours Digital Time Display

Additional Practical Features

- Triple Glazed Removable Tempered Glass
- Removable Door
- Removable Inner Rack

Installation & Compatibility

- Voltage/Frequency – 220-240V/50~60Hz
- Power Consumption – 2800W
- Interior Material – Iron Coating Enamel
- Installation Type – Built-In

Accessories Included

- Baking Tray x 1
- Wire Rack x 1
- Inner Rack x2

Plug Used:

Direct Built-in wiring

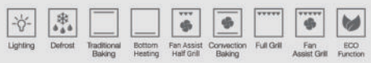

Remarks: There will be a variance of +20°C from the temperature set during operation.
*Purchase with purchase (PWP) is applicable with purchase of Multihood + Multicooker package only

Knob + Electronic Design

Removable Inner Rack for Easy Cleaning

WM: RM1,599*
EM: RM1,799*
PWP

Installation fees is NOT included for all the price stated above & price is subject to change without prior notice

CLASSIC NEW **MW259** Fully Digital Built-in Microwave Oven

Retail Price: EM: RM1,599 WM: RM1,399

Model No:SZ-MW259

Highlights:

- 25 Litres Capacity
- 8 Auto Menu
  Potato, Pasta, Pizza, Popcorn, Vege, Bever, Meat, Fish
- 8 Auto Menu
- Microwave Function
- Auto Weight Defrost
- Digital Clock
- Auto Cooking
- Grill(G)+Microwave
- Single Button Heating
- Express Cooking
- Child Safety Lock
- Timer Function

Installation & Compatibility

- Voltage/Frequency – 240V/50Hz
- Power Consumption – 1320W
- Interior Material – Stainless Steel SUS304
- Installation Type – Built-In

Accessories Included:

- Grill Rack x1
- Glass tray x1
- Roller Ring x1

Plug Used:

13amp

Remarks: There will be a variance of +20°C from the temperature set during operation.
*Purchase with purchase (PWP) is applicable with purchase of Multihood + Multicooker package only

WM: RM1,399*
EM: RM1,599*
PWP

Installation fees is NOT included for all the price stated above & price is subject to change without prior notice

EcoPro

FULLY DIGITAL WATER HEATER

HORIZON

VERTIK

15 YEARS WARRANTY ON ANTI-TANK LEAKAGE

7 YEARS WARRANTY ON HEATING ELEMENT

5 YEARS WARRANTY ON INTERNAL DC SILENT PUMP

1 YEARS WARRANTY *T & C apply ON INTERNAL PARTS

MADE IN MALAYSIA
BUATAN MALAYSIA

DIGITAL VALVE

HORIZON VERTIK

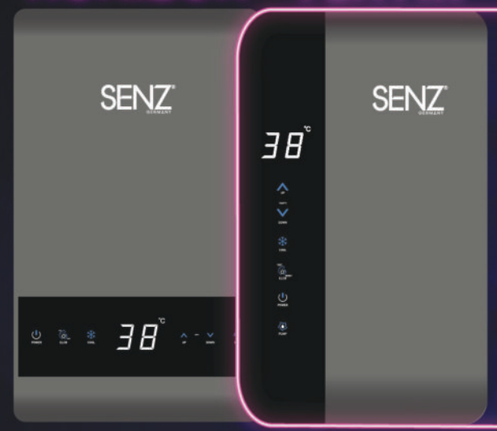

TITANIUM TITANIUM

Say Goodbye!! to sudden bursts of HOT water!

Experience the next level of safety, the 1st water heater in Malaysia that come with digital valve. Ensure a steady and safe water temperature, making of ideal for children and elder users.

HIGHLIGHT

Digital Valve – No Heat Residue
Say goodbye to sudden bursts of hot water! EcoPro ensures a steady and safe water temperature, making it ideal for children and elderly users.

Overheat Protection
To prolong the lifespan of the heater and protect internal components, EcoPro stops the pump and heater when overheating is detected.

Thermostat Protection
For added durability, EcoPro automatically shuts off the heating tank when it reaches 85°C, protecting the heating element and enhancing performance.

More Powerful DC Pump
For inverter DC pump models
– stronger water flow, stable pressure.

Anti-Scalding Technology
Worried about accidental burns? EcoPro automatically cuts off the heating element when the water temperature reaches 45°C, ensuring a safe shower experience.

Earth Line Indicator
– Auto Earth Wire Detection with Alarm
Safety first! EcoPro comes with a built-in alarm system that alerts you in case of faulty wiring, providing an extra layer of protection.

Precise Temperature Display
Monitor your water temperature with absolute accuracy, ensuring the perfect shower every time.

One-to-One Exchange Warranty*
We stand by the quality of our product! Enjoy hassle-free replacement for total peace of mind.

RM1 MILLION LIABILITY

PRODUCT LIABILITY COVERAGE

Our SENZ EcoPro products are backed by product liability coverage of up to RM1,000,000.

EcoPro Fully Digital DC Pump Instant Water Heater 4.5 kW C/W Rain Shower

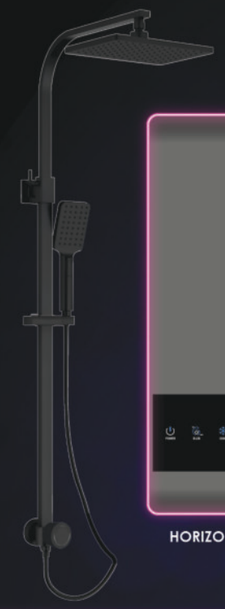

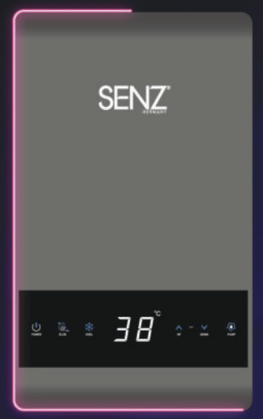

HORIZON: SZ-WH1018i-DGT

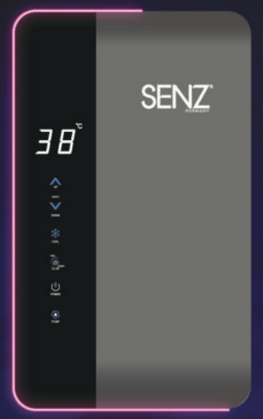

VERTIK: SZ-WH2028i-DGT

DIGITAL VALVE

Highlight
- Water Heater Design: Horizon / Vertik
- Power Rating : 4.5kW, 240V 50/60Hz
- Heater Type: Digital Valve
- DC Pump
- Min. Water Flow Rate : 2 litre/min
- Min. Water Pressure : 20kPa (0.2bar / 2.9psi)
- Max. Water Pressure : 400Kpa (4 bar / 58psi)
- Heater Dimension (mm) : 380 (H) x 230 (W) x 75 (D)
- Heater Nett Weight : Horizon Pump – 2.09kg
- Heater Nett Weight : Vertik Pump – 2.14kg
- Recommended installation height from bottom of heater to floor: 1.5m

Accessories Included:
- Rain Shower x1
- Rail Bar x1

Plug Used:

Direct Built-in wiring

Retail Price: **EM: RM1,199 WM: RM 999**

HORIZON: SZ-WH1018-MSIL

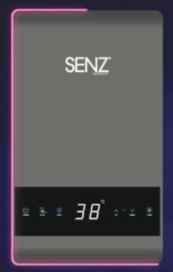

HORIZON: SZ-WH1018-MT

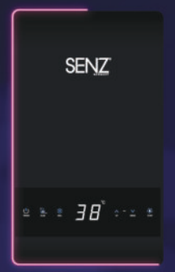

HORIZON: SZ-WH1018-MBLA

HORIZON: SZ-WH1018-MBLU

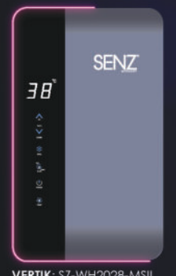

VERTIK: SZ-WH2028-MSIL

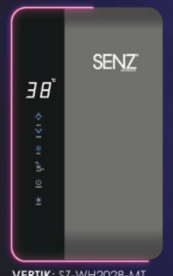

VERTIK: SZ-WH2028-MT

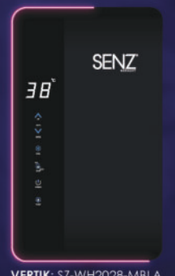

VERTIK: SZ-WH2028-MBLA

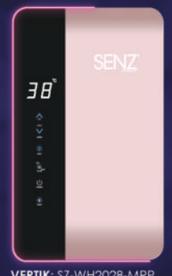

VERTIK: SZ-WH2028-MRP

MANUAL VALVE

Highlight
- Water Heater Design: Horizon / Vertik
- Power Rating : 4.5kW, 240V 50/60Hz
- Heater Type: Manual Valve
- DC Pump
- Min. Water Flow Rate : 2 litre/min
- Min. Water Pressure : 20kPa (0.2bar / 2.9psi)
- Max. Water Pressure : 400Kpa (4 bar / 58psi)
- Heater Dimension (mm) : 380 (H) x 230 (W) x 75 (D)
- Heater Nett Weight : Horizon Pump – 1.98kg
- Heater Nett Weight : Vertik Pump – 2.02kg
- Recommended installation height from bottom of heater to floor: 1.5m

Accessories Included:
- Rain Shower x1
- Rail Bar x1

Plug Used:

Direct Built-in wiring

Retail Price: **EM: RM 999 WM: RM 799**

Fully Digital System

Precise Temperature Display

Anti-Scalding Technology

Overheat Protection

Thermostat Protection

Auto Earth Wire Detection with Alarm

WARNING!

- Ensure **water heater is connected to earth wire!!** Failure to do so might result in electric shock!!
- For **Digital Valve** (WH1018i / WH2028i) model, water will not flow if there is no electricity supply, as the valve requires power to operate.

DIMENSION

SENZ HERMOSA(CH8380AC)

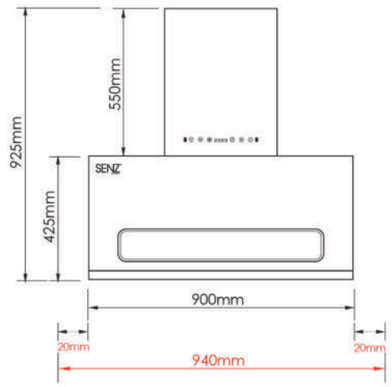

*Gap for dismantle of glass panel

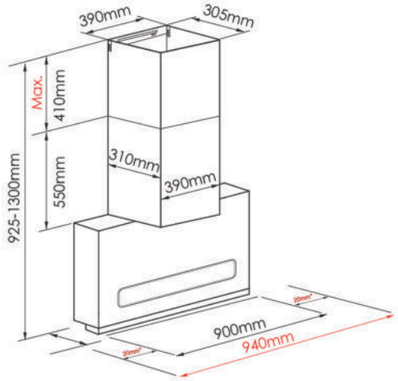

*Gap for dismantle of glass panel

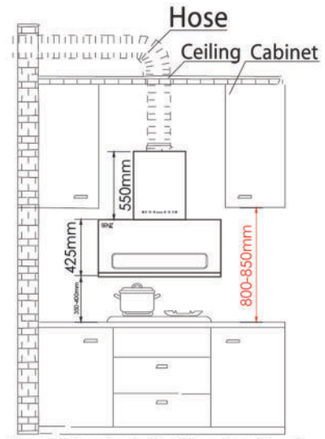

Front View install without cabinet

SENZ ENZO(CH8360AC)

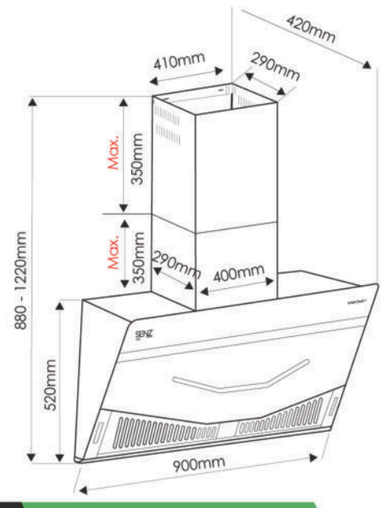

SENZ BONITA(CH336iAC)

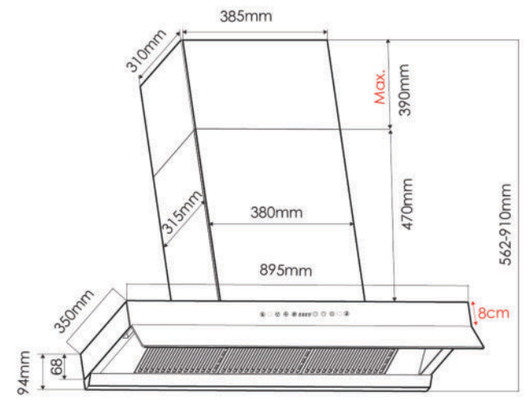

SENZ CH1288RC

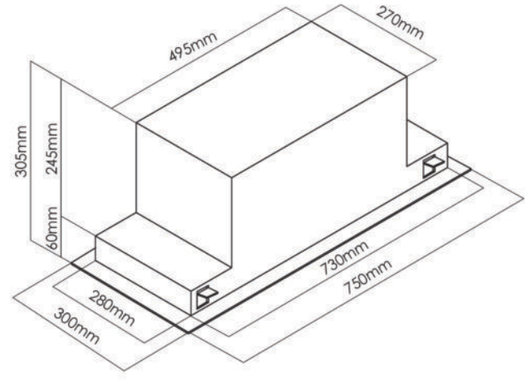

SENZ VRC868i

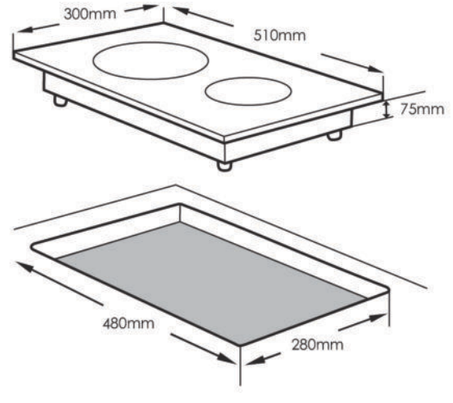

DIMENSION

SENZ RUBY(GS980FL)

For Existing Hole
Dimension

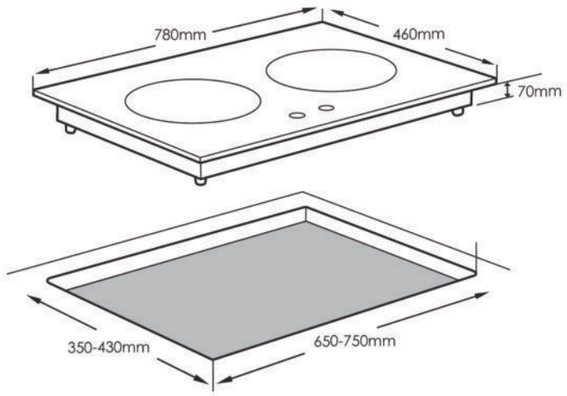

For New House
Dimension

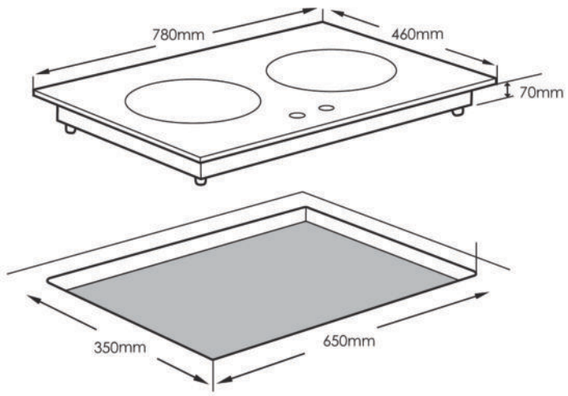

SENZ AMBER(GS6890FL)

For Existing Hole
Dimension

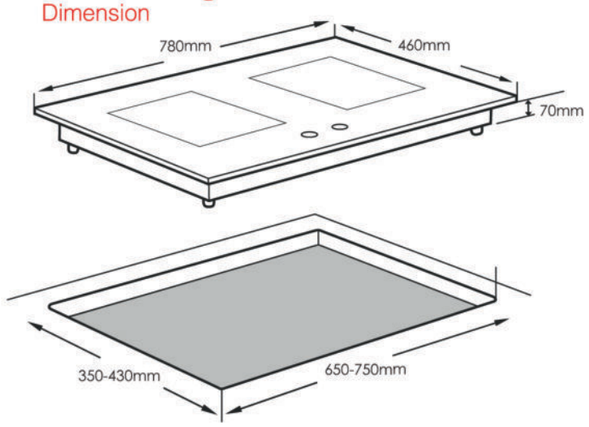

For New House
Dimension

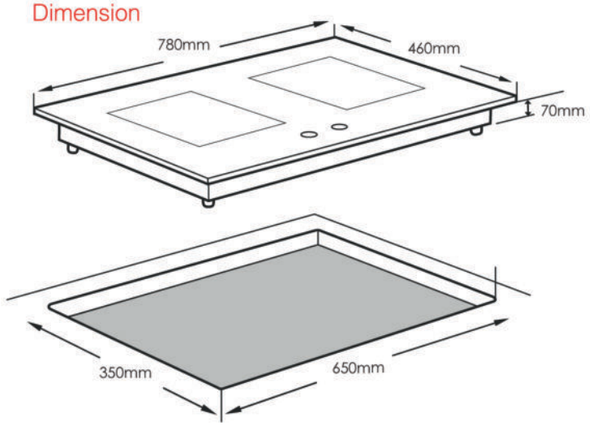

SENZ GS202

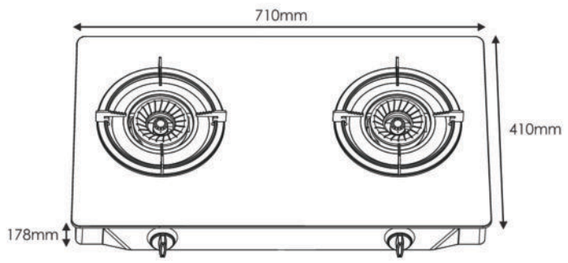

SENZ GS303

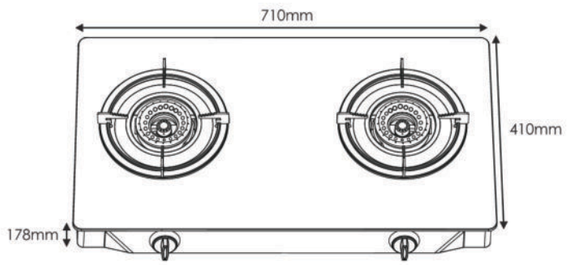

DIMENSION

SENZ OV7529

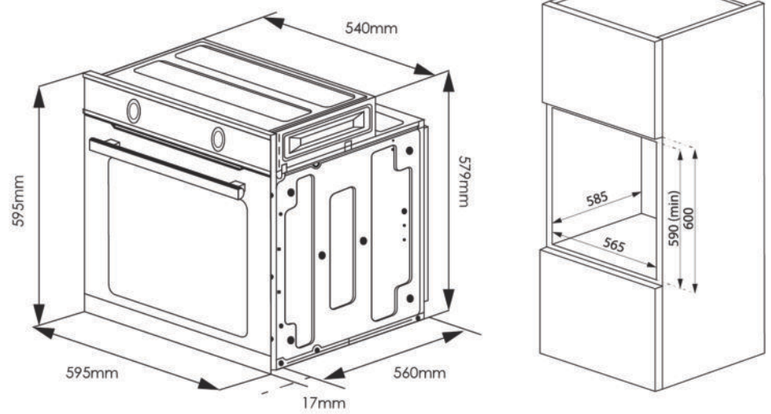

SENZ MW259

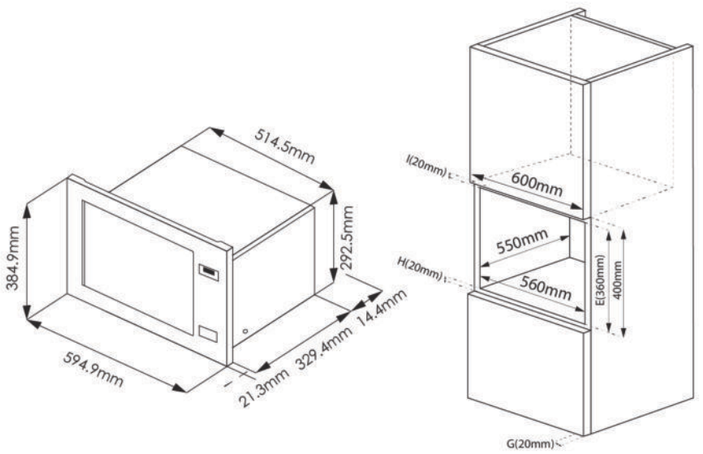

SENZ EcoPro HORIZON

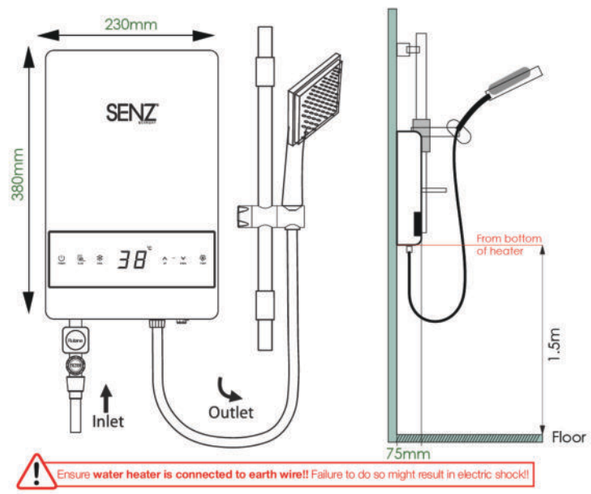

SENZ EcoPro VERTIK

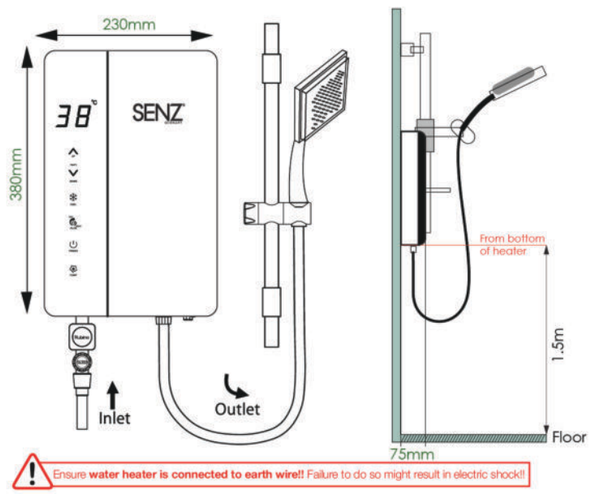

GAS HOB INSTALLATION SAFETY GUIDE

1 DO NOT ADJUST THE POSITION OF GAS CONNECTOR

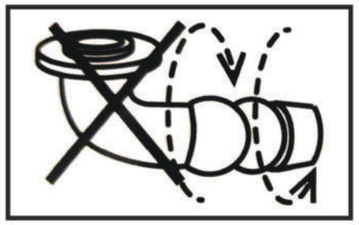

WARNING!!

ANY ATTEMPT TO ADJUST IT MAY CAUSE THE GAS CONNECTOR TO BREAK / LOOSEN AND MAY RESULT IN GAS LEAKING!!

WE ARE NOT HELD RESPONSIBLE FOR ANY ACCIDENT IF THIS HAS BEEN ADJUSTED.
PLEASE CONTACT US **03-8052 1011**
SHOULD YOU NEED TO ADJUST THE POSITION.

2 USE ONLY LOW PRESSURE REGULATOR (LPG)

3 GAS HOB INSTALLED WITHIN A CABINET

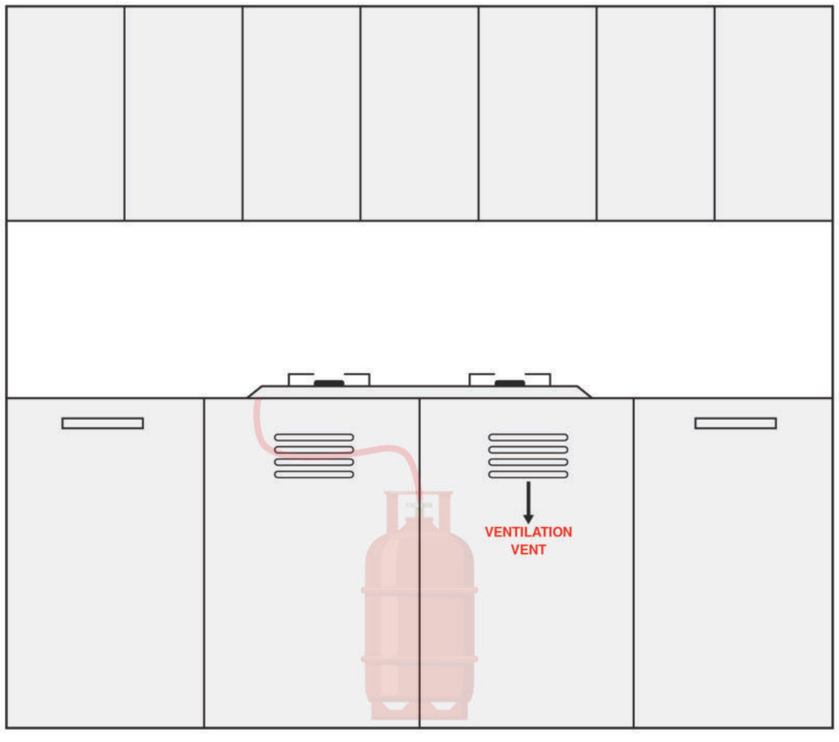

When installing a gas stove into a built-in cabinet, **MAKE SURE** there is sufficient space for proper ventilation within the cabinet to prevent any potential hazards. It is highly recommended to install a ventilation vent on the cabinet door for added safety.

Ducting Hood

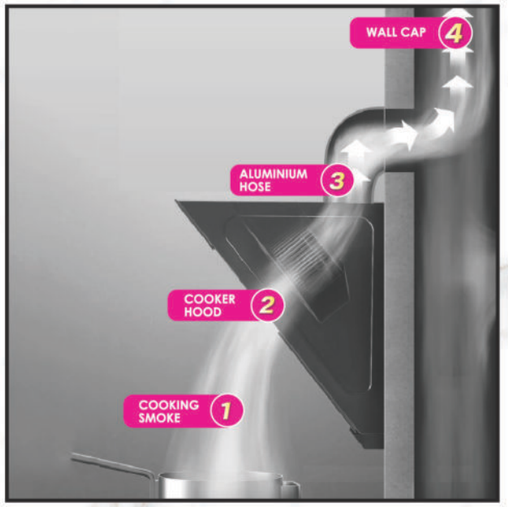

If you can make a coring hole in your kitchen wall, we will suggest you choose to **open hole to install aluminium hose** for extracting grease from your house

Ductless Hood

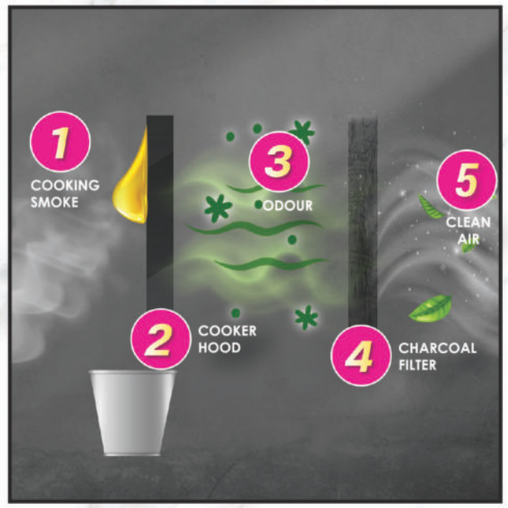

If you not able to make a coring hole in your kitchen wall, you'll need to install the hood as **recirculation system**. It consists of **charcoal filter** that function to **filter the odour and release clean air back in your house.**

WHEN INSTALLING A RECIRCULATING HOOD

note to prevent cabinet door vibrations while operating the hood

To ensure that you have enough ventilation in your cabinet to allow clean air to flow

Suggestion 1:
Open a ventilation hole on your cabinet door.

Suggestion 2:
Open a hole at inside and the top of your kitchen cabinet.

SPECIAL ACCESSORIES :

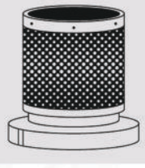

HONEYCOMB CHARCOAL FILTER

Compatible for all SENZ hood model including ducting hood

(expect model: SZ-CH1288RC, SZ-CH336iAC-G, SZ-CH2898DC)

****Install the honeycomb charcoal filter above the air outlet of your cooker hood**

RECOMMENDED HOOD INSTALLATION HEIGHT

from bottom of your cooker hood to your table top

1 ANGLED/HERMOSA/ZAFFIRO COOKER HOOD DESIGN

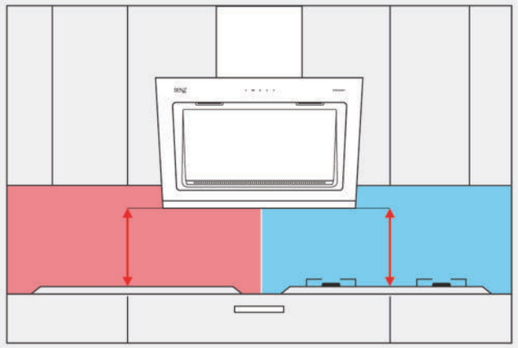

- Angled Cooker Hood with Electric Stove **at least 300 - 450mm**
- Angled Cooker Hood with Gas Stove **at least 400 - 500mm**

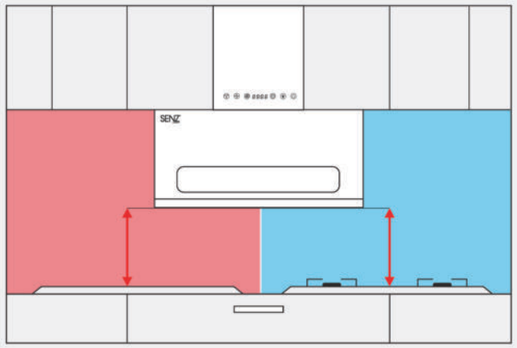

- Hermosa Cooker Hood with Electric Stove **at least 350 - 400mm**
- Hermosa Cooker Hood with Gas Stove **at least 350 - 400mm**

2 CHIMNEY/L SHAPE COOKER HOOD DESIGN

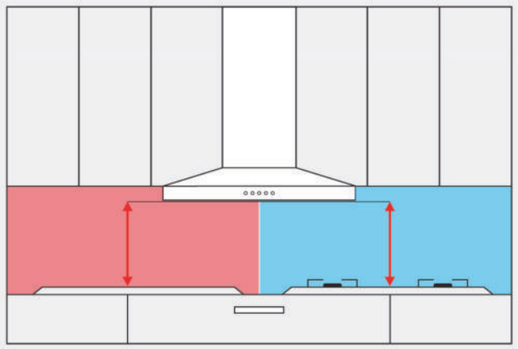

- Chimney Cooker Hood with Electric Stove **at least 600mm**
- Chimney Cooker Hood with Gas Stove **at least 600mm**

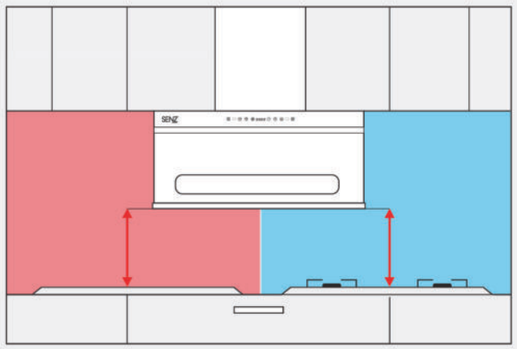

- L SHAPE Cooker Hood with Electric Stove **at least 300 - 450mm**
- L SHAPE Cooker Hood with Gas Stove **at least 400 - 500mm**

3 IINVISIBLE / NOVA COOKER HOOD

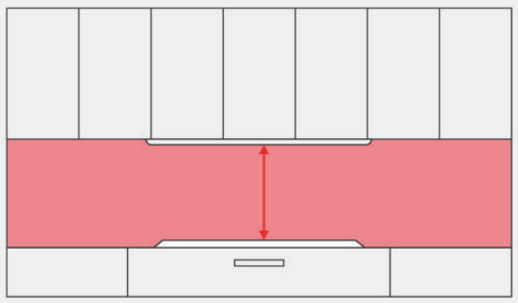

Invisible Cooker Hood with Electric Stove **at least 600mm**

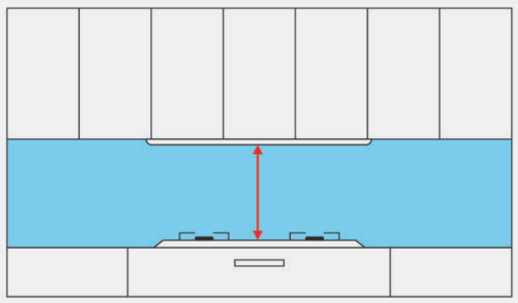

Invisible Cooker Hood with Gas Stove **at least 600mm**

Customer satisfaction is SENZ's No.1 priority!

Here's what some happy customers are saying about SENZ products!

SENZ® GERMANY
COOKING IN STYLE

Roszilah Embong
Kajang, Selangor

★★★★★

I have been using the Senz Double Ceramic Multicooker for 12 years and it still functions well. It's worth it and makes my family happy. The best senz product quality and no.1. to those who choose a modern and up-to-date lifestyle, senz products are the right choice.

Charlie Chan
Iskandar Puteri, Johor

★★★★★

I'm very happy and satisfied with the after sales service. Thank you.

Gunaraj Vangadajalapathy
Port Dickson, Negeri Sembilan

★★★★★

Good customer service and fast response from service technician

---

chng alison
Bayan Lepas, Pulau Pinang

★★★★★

I am very impressed with prompt response when consulting about doubts on the function . It is a 6-star customer service

👍👍👍

PRODUCTS UPDATED
FEBRUARY 2025

8 REASON WHY CUSTOMERS CHOOSE US

1. 16 Years of Expertise
2. The Only Kitchen Appliance Brand with Over 500,000 Social Media Followers
3. Over 1,000 Five-Star Google Reviews
4. Award-Winning Brand
5. Exclusive QR Code & YouTube Tutorials
6. Fast & Professional After-Sales Service
7. A Wide Range of Products for Every Budget
8. Designed for Malaysian

Award & Recognitions :

SENZ Authorized Dealer :

E-CATALOGUE

SENZ Marketing (M) Sdn Bhd 880141-K

SENZ HQ Showroom & Warehouse
No. 23 Jalan TPP 3,Taman Perindustrian Putra,
Puchong, Selangor Darul Ihsan, Malaysia

General Enquires - WhatsApp

- EN & BM Speaking Officer Assistance : 6019-9689226
- Chinese Speaking Officer Assistance : 6019-6729226

E.G.O. SIRIM Suruhanjaya Tenaga Tri-Ringz Technology AI intelSync Technology

senz.malaysia